We reserve all rights in this document and in the information contained therein. Reproduction, use or disclosure to third parties without express authority is strictly forbidden. © Copyright ABB

The information in this document is subject to change without notice and should not be construed as a commitment by ABB. ABB assumes no responsibility for any errors that may appear in this document.

Except as may be expressly stated anywhere in this document, nothing herein shall be construed as any kind of guarantee or warranty by ABB for losses, damages to persons or property, fitness for a specific purpose or the like.

In no event shall ABB be liable for incidental or consequential damages arising from use of this document.

This document and parts thereof must not be reproduced or copied without ABB's written permission, and contents therof must not be imparted to a third party nor be used for any unauthorized purpose. Contravention will be prosecuted.

Additional copies of this document may be obtained from ABB at its then current charge.

© Copyright 2024 ABB ALL right reserved.

ABB

SE-721 68 Västerås
Sweden

We reserve all rights in this document and in the information contained therein. Reproduction, use or disclosure to third parties without express authority is strictly forbidden. © Copyright ABB

TABLE OF CONTENTS

PAGE	PAGE DESCRIPTION	Date	Edited by
1	TITLE PAGE	2020-01-08	SETHSTA
2	TABLE OF CONTENTS	2022-09-29	SEALCHR1
3	TABLE OF CONTENTS	2022-09-29	SEALCHR1
4	TABLE OF CONTENTS	2022-09-29	SEALCHR1
5	TABLE OF CONTENTS	2022-09-29	SEALCHR1
6	TABLE OF CONTENTS	2022-09-29	SEALCHR1
7	SYMBOL INFORMATION	2019-06-20	SETHSTA
8	VIEW OF CONTACTS	2019-06-20	SETHSTA
8.1 and 8.2	REVISION INFORMATION	2023-10-30	SEANHAG7
9	DEVICE LIST	2019-06-20	SETHSTA
10	DEVICE LIST	2019-06-20	SETHSTA
13	BLOCK DIAGRAM CONTROL MODULE	2019-06-20	SETHSTA
14	BLOCK DIAGRAM SINGLE DRIVE MODULE	2019-06-20	SETHSTA
15	BLOCK DIAGRAM DRIVE MODULE	2019-06-20	SETHSTA
16	FRONT VIEW OF SINGLE CABINET MDU HV	2020-02-05	SETHSTA
16.1	XT31, CONNECTED OPTIONS	2019-06-20	SETHSTA
17	FRONT VIEW OF SINGLE CABINET MDU LV and HV	2019-06-20	SETHSTA
18	SIDE VIEWS OF SINGLE CABINET	2020-02-05	SETHSTA
19	VIEW OF DRIVE MODULE CABINET	2019-06-20	SETHSTA
20	VIEW OF PANEL BOARD CONVEYOR TRACKING	2019-06-20	SETHSTA
21	VIEW OF CONTACTOR & AXIS COMPUTER UNIT	2019-06-20	SETHSTA
22	VIEW OF VOLTAGE MEARSUREMENT BOX	2019-06-20	SETHSTA
23	CONTACT AT THE CABINET WALL	2024-03-12	SEANHAG7
24	OPT:POWER SUPPLY DSQC609 XT31, G4, G5, G6	2020-02-05	SETHSTA
25	RUN CHAIN block diagram in PANEL BOARD A21 and CONTROL PANEL S21	2019-06-20	SETHSTA
26	RUN CHAIN and PANEL BOARD A21 Sh. 1 of 4	2021-04-20	SETHSTA
27	RUN CHAIN and PANEL BOARD A21 Sh. 2 of 4	2021-04-20	SETHSTA
28	RUN CHAIN and PANEL BOARD A21 Sh. 3 of 4	2021-04-30	SETHSTA
28.1	PANEL BOARD A21 Sh. 4 of 4 Opt:EXT.CUSTOMER. CONNECT. SYSTEM SIGNALS	2021-04-30	SETHSTA
28.2	Opt. LED on front; Software based Mode Selector Internal safety harness	2019-06-20	SETHSTA
29	RUN CHAIN, EM.STOP, Standard 2 MODE SELECTOR option 3 MODE SELECTOR	2021-03-05	SETHSTA
29.1	RUN CHAIN S21, 2 & 3 EXTEND MODE SELECTOR, and HARDW. MODE SWITCH with SAFETY BOARD	2022-09-23	SEALCHR1
30	FPU, FLEXPENDANT and option HOT PLUG	2021-03-02	SETHSTA

TABLE OF CONTENTS

PAGE	PAGE DESCRIPTION	Date	Edited by
30.1	FPU, FLEXPENDANT and Opt. HOLD TO RUN DEVICE T10 JOGGING DEVICE -PAST DESIGN-	2019-06-20	SETHSTA
30.2	FPU, Extended FLEXPENDANT cable 15 - 30 m	2019-06-20	SETHSTA
31	RUN CHAIN A21 EXTERNAL CONTROLL PANEL/BOX , 2 & 3 MODE SELECTOR, EM.STOP	2021-03-05	SETHSTA
31.1	EXTERNAL CONTROLL PANEL/BOX RUN CHAIN EXT.S21, 2 & 3 MODE SELECTOR	2022-09-23	SEALCHR1
32	RUN CHAIN EXT A21 OPERATING WITH OPT: HOT PLUG rel 11.1	2024-03-12	SEANHAG7
34	MAIN COMPUTER/ANYBUS_CC/RS232 EXP. /INTERFACE BOARD/	2021-03-22	SETHSTA
35	MAIN COMPUTER A31 DSQC1000/1018	2024-03-12	SEANHAG7
36	MAIN COMPUTER A31 DSQC1000/1018 ; A32 DSQC1003	2024-03-12	SEANHAG7
37	FIELDBUS ADAPTER A32: ETHERNET/IP, PROFIBUS and PROFINET IO	2019-06-20	SETHSTA
38	PROFIBUS DP M/S A31.3	2020-08-31	SETHSTA
38.3	SAFETY BOARD A31.4 HARDWARE SWITCH	2023-10-30	SEANHAG7
38.4	SAFETY BOARD A31.4 SOFTWARE SWITCH	2019-06-20	SETHSTA
38.5	SAFETY BOARD A31.4 DSQC1015 Hardware and Software based Mode Switch	2019-06-20	SETHSTA
39	DEVICENET A31.2 m/s DSQC1006	2019-06-20	SETHSTA
40	DEVICENET ADAPTER	2020-02-05	SETHSTA
40.1	ETHERNET SWITCH A34, option MULTI MOVE 604-1/2	2023-10-30	SEANHAG7
41	ETHERNET SWITCH A62	2020-02-05	SETHSTA
42	VISION, INTEGRATED CAMERAS and CONVEYOR TRACKING Opt.1550-1	2019-06-20	SETHSTA
43	ETHERNET SWITCH A64/CAMERA	2020-02-05	SETHSTA
44	ETHERNET SWITCH A65	2024-03-12	SEANHAG7
45	DISPENCE PAC SUPPORT A57	2019-06-20	SETHSTA
46	DIGITAL PART OF COMBI I/O AND DIGITAL I/O UNIT DSQC651&652	2019-06-20	SETHSTA
47	DIGITAL I/O UNIT DSQC652	2019-06-20	SETHSTA
48	COMBI I/O UNIT DSQC651	2019-06-20	SETHSTA
49	RELAY I/O UNIT DSQC653	2019-06-20	SETHSTA
50	RELAY I/O UNIT DSQC653	2019-06-20	SETHSTA
51	ANALOGUE I/O UNIT DSQC355B	2019-06-20	SETHSTA
51.2	Local I/O Digital Base 16in/16out	2020-02-05	SETHSTA
51.4	Local I/O Digital add on 16in/16out	2019-06-20	SETHSTA
51.6	Local I/O Analog add on 4in/4out	2019-06-20	SETHSTA
51.8	Local I/O Relay add on 8RO/8DI	2020-02-05	SETHSTA
52	REMOTE I/O UNIT DSQC350A	2019-06-20	SETHSTA
53	ENCODER UNIT DSQC377	2019-06-20	SETHSTA

We reserve all rights in this document and in the information contained therein. Reproduction, use or disclosure to third parties without express authority is strictly forbidden. © Copyright ABB

TABLE OF CONTENTS

PAGE	PAGE DESCRIPTION	Date	Edited by
53.5	CONVEYOR TRACKING MODULE, DSQC 2000	2019-06-20	SETHSTA
54	REMOTE SERVICE BOX DSQC680 to Rel. 16.1 -PAST DESIGN-	2020-02-05	SETHSTA
54.1	REMOTE SERVICE BOX DSQC1016/DSQC1023 from Rel. 16.2	2023-10-30	SEANHAG7
55	MAINS CONNECTION XP0, Q1, F6, Z1, Z3	2022-04-05	SEALCHR1
55.5	TRANSFORMER AND REACTOR LOCATION REAR SIDE OF THE ENCLOSURE	2020-02-05	SETHSTA
56	TRANSFORMER UNIT 480V T1.1, T1.3, Z2, X10	2022-04-06	SEALCHR1
57	TRANSFORMER UNIT 262V T1.2, X10	2020-02-14	SETHSTA
58	OPTION : SERVICE OUTLET F4, F5, X22	2020-02-05	SETHSTA
59	POWER SUPPLY DSQC 626 AND 627 FOR DRIVE MODULE F2, G1, G9, K41.X1	2021-03-02	SETHSTA
60	POWER SUPPLY DSQC 661 AND 662 G1, G2, G3, F2, XT16	2023-10-30	SEANHAG7
61	FAN UNIT E1, E2, E3, E5, A21, A43	2022-03-03	SEALCHR1
61.1	FAN UNIT E1, E2, E3, E5, A21, A43 Release 21A-C	2022-09-29	SEALCHR1
62	CONTACTOR BOARD A43	2023-10-30	SEANHAG7
63	CONTACTOR UNIT A43, K42, K43, K44	2022-09-29	SEALCHR1
64	CONTACTOR UNIT XS40, XP40 Only for release 13.2 and earlier	2023-10-30	SEANHAG7
65	CONTACTOR BOARD A43.X5, XS5, XP5 Connection for release 13.2 and earlier	2023-10-30	SEANHAG7
66	AXIS COMPUTER UNIT A42, A41.1	2022-09-29	SEALCHR1
67	AXIS COMPUTER UNIT A42, A44	2022-09-29	SEALCHR1
68	FORCE MEASUREMENT BOX	2022-09-29	SEALCHR1
69	EPS A44, DSQC646	2022-09-29	SEALCHR1
70	SAFE MOVE A44, DSQC647	2022-09-29	SEALCHR1
71	SAFE MOVE A44, DSQC647	2022-09-29	SEALCHR1
72	MAIN DRIVE UNIT and ADDITIONAL AXIS 1-3 for LV A41.1 ,2 ,3 ,4 ,5	2022-09-29	SEALCHR1
73	MAIN DRIVE UNIT and ADDITIONAL AXIS 1-3 for HV A41.1, 3, 4, 5	2022-09-29	SEALCHR1
74	EXTERNAL AXIS A43, XS/XP7 Only for release 13.2 and earlier	2022-09-29	SEALCHR1
75	EXTERNAL AXIS no 7, 8, 9 A41.3 .4 .5 , XS/XP7	2022-09-29	SEALCHR1
75.1	EXTERNAL AXES ADAPTER HARNESS XS/XP40, A43:XP5, A7:XP7 :XP8 :XP9 Only for rel.14.1 and later.	2023-10-30	SEANHAG7
76	SERVO DRIVE SYSTEM IRB 120	2022-09-29	SEALCHR1
77	CONTROL CABLE IRB 120	2022-09-29	SEALCHR1
78	CUSTOMER SIGNALS IRB 120	2022-09-29	SEALCHR1
79	SERVO DRIVE SYSTEM IRB 140	2022-09-29	SEALCHR1
80	CONTROL CABLE IRB 140	2022-09-29	SEALCHR1
81	CUSTOMER SIGNAL SINGLE CABINET IRB 140	2022-09-29	SEALCHR1

We reserve all rights in this document and in the information contained therein. Reproduction, use or disclosure to third parties without express authority is strictly forbidden. © Copyright ABB

TABLE OF CONTENTS

PAGE	PAGE DESCRIPTION	Date	Edited by
82	SERVO DRIVE UNIT IRB 260	2022-09-29	SEALCHR1
83	CONTROL CABLE IRB 260	2022-09-29	SEALCHR1
84	CUSTOMER POWER/SIGNAL SINGLE CABINET IRB 260	2022-09-29	SEALCHR1
85	SERVO DRIVE UNITS IRB 360	2022-09-29	SEALCHR1
86	CONTROL CABLE IRB 360	2022-09-29	SEALCHR1
87	CUSTOMER SIGNAL SINGLE CABINET IRB 360	2022-09-29	SEALCHR1
87.1	CUSTOMER POWER/SIGNAL SINGLE CABINET IRB 360	2022-09-29	SEALCHR1
87.4	SERVO DRIVE SYSTEM IRB 390	2022-09-29	SEALCHR1
87.5	CONTROL CABLE IRB 390	2022-09-29	SEALCHR1
88	SERVO DRIVE SYSTEM IRB 460	2022-09-29	SEALCHR1
89	CONTROL CABLE IRB 460	2023-10-30	SEANHAG7
90	CUSTOMER POWER/SIGNAL IRB460, 660, 760	2022-09-29	SEALCHR1
91	C-BUS/P-BUS/ CP/CS//Profi-Net IRB460, 660, 760	2022-09-29	SEALCHR1
92	SERVO DRIVE SYSTEM IRB 660, 760	2022-09-29	SEALCHR1
93	CONTROL CABLE IRB 660, 760	2022-09-29	SEALCHR1
93.5	SERVO DRIVE SYSTEM IRB 1200	2022-09-29	SEALCHR1
93.6	CONTROL CABLE IRB 1200	2022-09-29	SEALCHR1
93.7	CUSTOMER SIGNAL SINGLE CABINET IRB 1200	2022-09-29	SEALCHR1
94	SERVO DRIVE SYSTEM IRB 1410	2022-09-29	SEALCHR1
95	CONTROL CABLE IRB 1410	2022-09-29	SEALCHR1
96	CUSTOMER SIGNALS SINGLE CABINET IRB 1410	2022-09-29	SEALCHR1
97	SERVO DRIVE SYSTEM IRB 1520	2022-09-29	SEALCHR1
98	CONTROL CABLE IRB 1520	2022-09-29	SEALCHR1
99	CUSTOMER SIGNALS IRB 1520	2022-09-29	SEALCHR1
100	SERVO DRIVE UNIT IRB 1600/1660	2022-09-29	SEALCHR1
101	CONTROL CABLE IRB 1600/1660	2022-09-29	SEALCHR1
102	CUSTOMER POWER/SIGNAL SINGLE CABINET IRB 1600/1660	2022-09-29	SEALCHR1
103	SERVO DRIVE UNIT IRB 2400	2022-09-29	SEALCHR1
104	CONTROL CABLE IRB 2400	2022-09-29	SEALCHR1
105	CUSTOMER POWER/SIGNAL SINGLE CABINET IRB 2400	2022-09-29	SEALCHR1
106	SERVO DRIVE SYSTEM IRB 2600	2022-09-29	SEALCHR1
107	CONTROL CABLE IRB 2600	2023-10-30	SEANHAG7
108	CUSTOMER POWER/SIGNAL PROFINET IRB2600	2022-09-29	SEALCHR1

We reserve all rights in this document and in the information contained therein. Reproduction, use or disclosure to third parties without express authority is strictly forbidden. © Copyright ABB

TABLE OF CONTENTS

PAGE	PAGE DESCRIPTION	Date	Edited by
109	CUSTOMER POWER/SIGNAL DEVICE NET IRB2600	2022-09-29	SEALCHR1
110	CUSTOMER POWER/SIGNAL PROFI BUS IRB 2600	2022-09-29	SEALCHR1
111	DevNet/PofiNet/Ethernet/Profibus addition to CP/CS IRB2600	2022-09-29	SEALCHR1
112	SERVO DRIVE SYSTEM IRB 4400	2022-09-29	SEALCHR1
113	CONTROL CABLE IRB 4400	2022-09-29	SEALCHR1
114	CUSTOMER POWER/SIGNAL SINGLE CABINET IRB 4400	2022-09-29	SEALCHR1
115	SERVO DRIVE SYSTEM IRB 4600	2022-09-29	SEALCHR1
116	CONTROL CABLE IRB 4600	2023-10-30	SEANHAG7
117	CUSTOMER POWER/SIGNAL IRB4600	2022-09-29	SEALCHR1
118	CUSTOMER POWER/SIGNAL DEVICE NET & PROFINET/ETHERNET/IP IRB4600	2022-09-29	SEALCHR1
119	CUSTOMER POWER/SIGNAL PROFI BUS IRB 4600	2022-09-29	SEALCHR1
120	DevNet/ProfiNet/Ethernet/Profibus addition to CP/CS IRB4600	2022-09-29	SEALCHR1
120.1	SERVO DRIVE SYSTEM IRB 6400R	2022-09-29	SEALCHR1
120.2	CONTROL CABLE IRB 6400R	2022-09-29	SEALCHR1
120.3	CUSTOMER POWER/SIGNAL/BUS IRB 6400R	2022-09-29	SEALCHR1
120.4	SERVO DRIVE SYSTEM IRB 6700	2022-09-29	SEALCHR1
120.5	CONTROL CABLE IRB 6700/6790	2023-10-30	SEANHAG7
120.6	CUSTOMER POWER/SIGNAL PARABUSCOM SINGLE CABINET PROFI/DEVICE NET BUS IRB 6700	2022-09-29	SEALCHR1
120.7	DevNet//EtherNet//ProfiNet//PBUS ADDITION TO CP/CS IRB 6700	2022-09-29	SEALCHR1
121	SERVO DRIVE SYSTEM IRB 66xx - 76xx	2022-09-29	SEALCHR1
122	CONTROL CABLE IRB 66xx - 76xx	2022-09-29	SEALCHR1
123	COOLING AXES 1/2 SINGLE CABINET IRB 6600 - 7600	2022-09-29	SEALCHR1
124	CUSTOMER POWER/SIGNAL SINGLE CABINET IRB 6600 - 7600	2022-09-29	SEALCHR1
125	DevNet//EtherNet//ProfiNet//PBUS ADDITION TO CP/CS IRB 66xx - 7600	2022-09-29	SEALCHR1
126	CUSTOMER POWER/SIGNAL SINGLE CABINET PROFI BUS IRB 6600 - 7600	2022-09-29	SEALCHR1
128	CUSTOMER POWER/SIGNAL SINGLE CABINET DEVICE NET IRB 6600 - 7600	2022-09-29	SEALCHR1
128.5	SERVO DRIVE SYSTEM AXES 1-3 IRB 87xx	2022-09-29	SEALCHR1
128.6	SERVO DRIVE SYSTEM AXES 4-6 IRB 87xx	2022-09-29	SEALCHR1
128.7	CONTROL CABLE IRB 87xx	2022-09-29	SEALCHR1
128.8	CUSTOMER POWER/SIGNAL PARAMULTI SINGLE CABINET PROFI/DEVICE NET BUS IRB 8700	2022-09-29	SEALCHR1
128.9	EtherNet//ProfiNet//PBUS ADDITION TO CP/CS PARAMULTI IRB 8700	2022-09-29	SEALCHR1

We reserve all rights in this document and in the information contained therein. Reproduction, use or disclosure to third parties without express authority is strictly forbidden. © Copyright ABB

We reserve all rights in this document and in the information contained therein. Reproduction, use or disclosure to third parties without express authority is strictly forbidden. © Copyright ABB

Stomme, ramverk/
Functional equipotential bonding

Stomme, ramverk/
Functional equipotential bonding

Jord, allmän symbol/
Earth , general symbol.

Störningsfri jord/
Functional earthing.

Skyddsjord/
Protective earthing.

Tvinnade ledare/
Twisted conductors.

Trippel tvinnade ledare/
Triple twisted conductors.

Fyrdubbelt tvinnade ledare/
Quadruple twisted conductors.

Part A
Tvinnade ledare part A med part B
Twisted conductors part A with part B
Part B

Skärm/
Shield.

Slutkontakt/
Make contact, general.

Handmanövrerad brytare, allmän/
Switch manually operated, general.

Styrning med spak/
Actuator (operated by lever).

Styrning genom vridning/
Actuator(operated by turning).

Styrning genom tryckning/
Actuator(operated by pushing).

Nödstopp (svamptryckknapp)/
Actuator, emergency.

Skarvhylsa
Through joint

Filter/
Filter.

Lampa/
Lamp.

Kontakthylsa hona/
Socket outlet female.

Kontaktstift hane/
Pin male.

Strömtransformator/
Current transformer.

Likström, DC /
Direct current, DC.

Växelström, AC /
Alternating current, AC.

Styrning, elektromagnetisk styrdon/
Actuator, by electromagnetic.

U
Varistor/
Varistor

PAST DESIGN
Old component design.
Old circuit design.
Old phased out option.

Ethernet signal:
1. Transmit TX+ or TX- and receive RX+ or RX-
2. Unit possible to transmit or recieve TX+/RX+ or TX-/RX-
3. Ethernet Gigabit signal, transmit pair one MX1+ , MX1-
and receive the MX2+ , MX2-
If Gigabit transmit pair MX3+ , MX3- and receive pair MX4+ , MX4-

Column coordinate number on the drawing

Wire/connector one colour code.
BK = Black, BN = Brown, RD = Red, OG = Orange
YE = Yellow, GN = Green, BU = Blue, VT = Violet
GY = Grey, WH = White, PK = Pink, TQ = Turquoise

Wire/connector two colour code.

Example 1 : WH/RD = White and Red.
Example 2 : GNYE = Green and Yellow.

Example: Cable with four colour coded wire,
square area AWG24 and cable number 709.

709 AWG24	BK
	BN
	RD/OG
	BK/OG

Translation table square area from AWG to mm2.

AWG28	0,093	AWG18	0,93
AWG26	0,15	AWG16	1,25
AWG24	0,25	AWG14	2,44
AWG22	0,34	AWG12	3,02
AWG20	0,56	AWG10	4,65

Run chain presentation starts at sheet 26.
The Run chain marked as a wider wire.

Example: Run chain marked with a wider wire.

Example: Not Run chain marked with a thin wire.

Example, showing how to read the information before and after a signal.

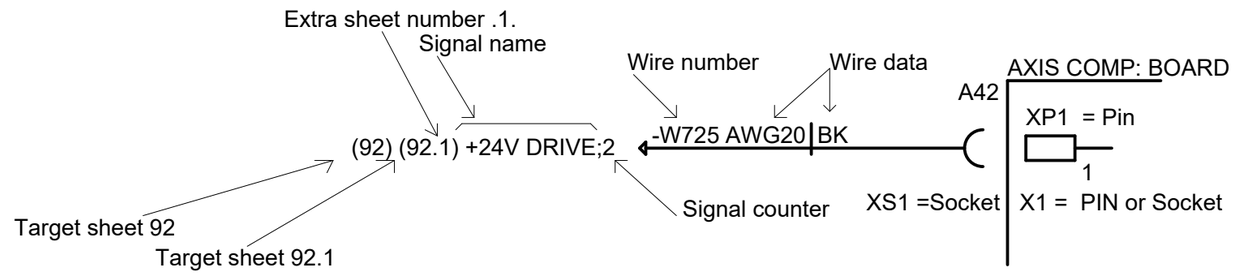

Latest revision:	ABB Lab/Office: RA/RDP	IRC5 DESIGN Rel: 24:B SYMBOL INFORMATION	Status: APPROVED	Plant: = Location: + Sublocation: +
Prepared by, date: A Hägglund / Approved by, date: S Hällgren 2024-03-18			Document no. 3HAC024480-011	Rev. Ind 18

We reserve all rights in this document and in the information contained therein. Reproduction, use or disclosure to third parties without express authority is strictly forbidden. © Copyright ABB

Top view 4 pole Phoenix

Top view

Power connection 64 pole. XP1
Industrial connector Harting/Amphenol

Front view

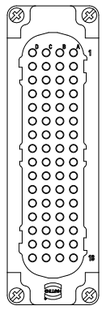

Side view

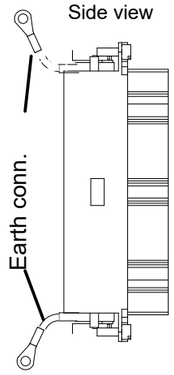

Position for Micro/Mini Fit (principal)

Back view 6 pole.

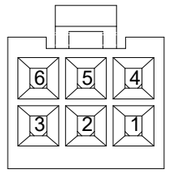

Side view

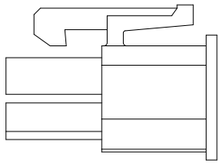

Latest revision:		ABB	Lab/Office: RA/RDP	IRC5 DESIGN Rel: 24:B VIEW OF CONTACTS	Status: APPROVED	Plant: = Location: + Sublocation: +	
Prepared by, date: A Hägglund	Approved by, date: S Hällgren 2024-03-18				Document no. 3HAC024480-011	Rev. Ind 18	Page 8 Next 8.1 Total 164

We reserve all rights in this document and in the information contained therein. Reproduction, use or disclosure to third parties without express authority is strictly forbidden. © Copyright ABB

Revision 11 2018 10 Release 18.2

Sh.1 ABB AB changed to ABB
Sh.7 Symbol Varistor added. coordinate column 4 and 5.
Sh.16 New contact X63 Flow censor//XS11 add. coordinate column 2 and 3.
Sh.20 X3 added to A67 coordinate column 8
Sh.23 New contact X63 Flow censor//Second Power cable XP11 added, coordinate column 3 and 7.
Sh.24 Updated interruption point 0V DC in XT31:5 and :6// updated :1
Sh.30 AWG20 BU removed column coordinate 5
Sh. 51.2 XT31:1 and XT31:5 was exchanged //1.TXRX column 3 moved to -I/O.X5 column 3//
Wire 704 was exchanged to 776 in 18.2 and Wire 703 was exchanged to 775 in 18.2
Sh. 53.5 Terminal 1 was moved x1, x3, x11, x12, x13, x14
Sh. 94 Ref. to 3hac02803-3 was adjusted.
Sh. 100 Ref. to 3hac021351-003 was adjusted.
Sh.128.6 All terminal connection to R1.MP.B was updated.//A41.1. X15 and X16 updated coordinate column 3 and 4

Revision 12 2019 05 Release 19.A

Information: New release indentification 19.A, 19.B, 19.C, 19.D
the releases is precented four times every year instead of two times as before.
Sh.8.1 Revision information 19.A
Sh.9, 10 Device list Updated.
Sh.16 I/O connections implemented.
Sh.16.1 Added sheet. The information on this sheet is under shaping and will develop further in future releases.
Sh.17 X6 and X7 shifted location coordinate column 3
Sh.24 XT31:1 and :5 ref to 51.2
Sh.29 Changed presentation
Sh.29.1 added
Sh.31 changed presentation.
Sh.31.1 added
Sh.38.3 new sheet
Sh.38.4 new sheet
Sh.38.5 Wire 580 and 581 new target sheets
Sh.51.2 wire number 787 was 779, 785 was 777, 786 was 778 column 7//0V_INT1, +24V_INT1
0V_INT2, +24V_INT2 // wire 787, 785 new connection was at X63.// XT31-.1 and :5 added to cordinate column 8
Sh.51.4 0V_INT, +24V_INT
Sh.51.6 0V_INT, +24V_INT
Sh.51.8 0V_INT, +24V_INT

Revision 13 2019 06 -- 2020 02 Release 19.B, C, D, 20.A

Sh.8.1 new revision information.
Sh.16 Devicetag add. A41.1, .3, .4, .5 column 2 and 3.
Sh.23 new sheet ref. XS11/XP11 128.6//
Sh.28 deffenition line added at column 6 contact x11 AWG24.
Sh.34 Main computer Unit DSQC1024 add. to rel.19.B for IRB140, 1600, 2600, from Rel 20.A the remaining robots.
Sh.35 Main computer Unit DSQC1024 add. to rel.19.B for IRB140, 1600, 2600, from Rel 20.A the remaining robots.
Sh.36 Main computer Unit DSQC1024 add. to rel.19.B for IRB140, 1600, 2600, from Rel 20.A the remaining robots.
Sh.40 new sheet ref. to A35 column 4.
Sh.51.8 Internal serial bu was removed at column 3
Sh.55 AWG10 column 4// GNYE AWG10 at column 4
Sh.55.5 New sheet Transformer location
Sh.57 IRB1200 implemented
Sh.63 wire 142 BK, 143 BK, 144 BK added at coordinate column 8
Sh.76 C1--D2 shield connection removed column 7.
Sh.91 Ref 40 A35 was A35.1" Column 1.
Sh.109 GNYE column 5 new position.
Sh.111 "Customer Connection" text removed column 1//A35 ref.40 added.
Sh.120.7 Ref 40 A35 was A35.1" Column 1.
Sh.128.9 DevNet removed from sheet name.

Revision 14 2020 09 Release 20.B

Sh.2 Table of contest updated.
Sh.3 Table of contest updated.
Sh.4 Table of contest updated.

Sh.5 Table of contest updated.
Sh.6 Table of contest updated.
Sh.8.1 new revision information.
Sh.9 Device list table updated.
Sh.10 Device list table updated.

Sh.87.4 Wire number and connections XP1/R1.MP updated.
Sh.87.5 Wire number and connections XP1/R1.MP updated.

Sh.91 Ethernet 460, 660, 760, Profinet, added.
Sh.125 Ethernet/Profinet implemented. IRB6660

Revision 15 2021 05 Release 21.C

Sh.1 Copyright updated 2021

Sh.2 Table of contest updated.
Sh.3 Table of contest updated.

Sh.4 Table of contest updated.
Sh.6 Table of contest updated.

Sh.8.1 new revision information.
Sh.23 XS3/XP3 External customer Ref.28.1 was ref. to 33

Sh.27 A21.X5 :3, :5, :9, :11 Jumper text add. Not connected. Ref to manual. Column 2.
Sh.28.1 X5:3, :5, :9, :11 Jumper text add. (Not 2) Not connected. Ref to manual. At Column 8

Sh.34 PCI- cards 31.2, 31.3, 31.4 exchanged place

Revision 16 2022 09 Release 22.C

Sh.23 Added Functional earth.
Sh.29.1 Swapped 24V-/0V COMMON_CH1/-CH2 connection on -S21.1-XP1 (2Mode Selector)
Sh.31.1 Swapped 24V-/0V COMMON_CH1/-CH2 connection on -S21.1-XP1 (2Mode Selector)
Sh.56 Changed wire 150 and 151 from AWG12 to AWG10
Sh.61 Added new Fan connection (Fan Control)
Sh.61.1 Contains the old Fan connection (without Fan Control)
Sh.63 Added Auxiliary contact block connection (Fan Control)
Sh.75 Added reference to Option 1389-1
Sh.75.1 Added reference to Option 1389-1
Sh.90 Added Option 803-3 and 803-4
Sh.90 Added interruption point for DeviceNet and ProfiBus to p. 91. Added Grounding see Sh.117 note
Sh.91 Added "Option 803-3" and interruption point to DeviceNet
Sh.108 Added "Option 803-2" and interruption point to ProfiNet/EthernetIP. Added Grounding see Sh.117 note
Sh.109 Added grounding on harness CP/CS D7 and "Not connected"-note on manipulator side
Sh.110 Added grounding on harness CP/CS D7 and "Not connected"-note on manipulator side
Sh.111 Added interruption point for ProfiNet/EtherNetIP
Sh.117 Added grounding on harness CP/CS D7 and "Not connected"-note on manipulator side
Sh.118 Added Option 802-2 and ProfiNet/EthernetIP ref. to p. 120. Added Grounding see Sh.117 note
Sh.119 Added grounding on harness CP/CS D7 and "Not connected"-note on manipulator side
Sh.120 Added interruptions points for ProfiNet/EthernetIP
Sh.120.6 Added grounding on harness CP/CS D7 and "Not connected"-note on manipulator side
Sh.128.9 Added DeviceNet and ProfiBus connection

We reserve all rights in this document and in the information contained therein. Reproduction, use or disclosure to third parties without express authority is strictly forbidden. © Copyright ABB

Revision 17 2023 10 Release 23.D

Complete update of circuit diagrams to get a more united look of text font, placement, and general esthetics.
All pages updated.
Specific changes as described below.

Sh. 8.2 New page
Sh. 38.3 Misspelling of contact -S21 was -XP37
Sh. 40.1 Misspelling of contact -XP1 was -XP39
Sh. 54 Past design, DSQC680 is replaced with DSQC1024
Sh. 54.1 Remote service 4G implemented.
Sh. 60 Misspelling of contact -XP1 was -XP39
Sh. 62/65/75.1 Redesign of PTC-circuits to accommodate several designs.
Sh. 89/107/116/120.5 Jumper added to PTC-circuit.

Revision 18 2024 03 Release 24.B

Sh. 23, 35, 36, 44, Update connection variants of customer Ethernet connection
Sh. 32, Update Hot-Plugg connection XP/XS100

Location name	Function name	Page	Location name	Function name	Page
R1.1	BLEEDER	72	E1-E43-R1	Thermistor	61
EXT-S22	Option HOT PLUG	32	E1-E44	Fan unit	61
EXT-S22-H1	SIGNAL LAMP	32	E1-E44-R1	Thermistor	61
A21	PANEL BOARD	26	E2	EXT. COMPUTER FAN opt.708-2	61
A23	OPTION:STATUS LED ON FRONT	28.2	E2-M1	EXTERNAL COMPUTER FAN	61
A31	MAIN COMPUTER	35	E3	INTERNAL FAN	61
A31-E22	CHASSIS BLOWER	35	E3-M1	INTERNAL FAN	61
A31.2	DeviceNet M/S DSQC1006	39	E5	MDU FAN	61
A31.3	PROFIBUS M	38	E5-M1	OPTION : INTERNAL FAN	61
A31.4	Safety Board DSQC1015	38.5	EXT-A21-S21.2-H1	MOTOR ON (LAMP)	31
A32	Expansion board serie DSQC1003	36	EXT-ETH_FPU	FLEXPENDANT	30.1
A32.1	ETHERNET/IP Fieldbus adapter DSQC 669 Slave	37	EXT-ETH_FPU-USB	FLEXPENDANT	30.1
A32.2	PROFIBUS Fieldbus adapter DSQC 667 Slave	37	EXT-S21.2	MOTOR ON PB	31
A32.3	PROFINET IO Fieldbus adapter DSQC 688 Slave	37	EXT-S21.3	EMERGENCY PB	31
A32.4	DEVICENET IO Fieldbus adapter DSQC 1004 Slave	37	EXT-T10	T10 JOGGING DEVICE	30.1
A34	ETHERNET SWITCH A34 opt. MULTI MOVE 604-1/2	40.1	EXT-T10.1	HOLD TO RUN DEVICE	30.1
A41	MAIN SERVO DRIVE UNIT	94	EXT-T10-ETH_FPU	FLEXPENDANT	30.1
A41.1	MAIN SERVO DRIVE UNIT	66	F1	AUTOMATIC FUSE	63
A41.1-8	Main servo drive unit 4600	115	F2	AUTOMATIC FUSE	59
A41.1-6	MAIN SERVO DRIVE UNIT	103	F4	EARTH FAULT BREAKER	58
A41.2	ADDITIONAL RECTIFIER UNIT	72	F5	CIRCUIT BRAKER	58
A41.3	ADDITIONAL DRIVE UNIT	75	F6	Option: CIRCUIT BRAKER	55
A41.4	ADDITIONAL DRIVE UNIT	75	G1	POWER SUPPLY DSQC661	60
A41.5	ADDITIONAL DRIVE UNIT	75	G2	POWER DISTRIBUTION BOARD DSQC662	60
A42	AXIS COMPUTER BOARD	66	G3	ENERGY BANK	60
A43	CONTACTOR BOARD	62	G6	DEVICENET POWER SUPPLY	24
A44	EPS	67	G9	POWER SUPPLY Note 1)	59
A57	Process Interface Board (PIB)	45	H1	STATUS DIOD DRIVE MODULE	63
A62	Ethernet switch	41	K41	RELAY UNIT	59
A64	Ethernet switch	43	K42	MOTORS ON CONTACTOR 1	63
A65	Ethernet switch	44	K43	MOTORS ON CONTACTOR 2	63
A67-CTM	DSQC2000 Conveyor Tracking	53.5	K44	BRAKE CONTACTOR	63
A41.3	ADDITIONAL DRIVE UNIT	72	M140-A41.1	MAIN SERVO DRIVE UNIT	79
A41.4	ADDITIONAL DRIVE UNIT	72	M260-A41.1	MAIN SERVO DRIVE UNIT	82
A41.5	ADDITIONAL DRIVE UNIT	72	M360-A41.1	MAIN SERVO DRIVE UNIT	85
C1	CAPACITOR	122	M460-A41.1	Main servo drive unit 460	88
E1-E41	FAN UNIT	61	O716-I/Ox	DIG. PART OF COMBI I/O AND DIG. I/O UNIT	46
E1-E41-R1	THERMISTOR	61	O719-I/O.X	ANALOGUE I/O UNIT	51
E1-E42	FAN UNIT	61	O721-I/O.X	REMOTE I/O UNIT	52
E1-E42-R1	Thermistor	61	O726-I/O.X	ENCODER UNIT	53
E1-E43	Fan unit	61	O738-EXT-FMB	Option: 738-1	68

We reserve all rights in this document and in the information contained therein. Reproduction, use or disclosure to third parties without express authority is strictly forbidden. © Copyright ABB

Location name	Function name	Page	Location name	Function name	Page
O738-EXT-FMB-A1	DSQC686 VOLTAGE MEASURE BOARD	68			
O818-RELAY I/O	RELAY I/O UNIT	50			
OP1-Q1	Main switch circuit breaker	55			
OP1-Z2	REAKTOR UNIT	56			
OP716_816-I/O.X	DIGITAL I/O UNIT	47			
OP717_817-I/O.X	COMBI I/O UNIT	48			
OP718_818-I/O.X	DIG. PART OF RELAY I/O UNIT	49			
P1	OPTION :DUTY TIME COUNTER	62			
Q1	MAINS SWITCH	55			
R1.1	BLEEDER	73			
S21	CONTROL PANEL Sh.1	29			
S21.2	MOTOR ON PB	29			
S21.2-H1	MOTOR ON (LAMP)	29			
S21.3	EMERGENCY PB	29			
S22	Option with HOT PLUG	30			
S22-H1	SIGNAL LAMP	30			
T1.1	TRANSFORMER UNIT	56			
T1.2	TRANSFORMER UNIT	57			
T1.3	TRANSFORMER UNIT	56			
Z1	OPTION: MAINS LINE FILTER	55			
Z2	REAKTOR UNIT	56			
A41.1	MAIN SERVO DRIVE UNIT	121			
A61	Option: REMOTE SERVICE BOX DSQC1016/DSQC1023	54.1			
A41.1	MAIN SERVO DRIVE UNIT	76			
A41.1	MAIN SERVO DRIVE UNIT	128.6			
Z3	OPTION: MAINS LINE FILTER IRB8700	55			
S21.1	3-MODE SELECTOR	29			
S21.1	2-MODE SELECTOR	29			
EXT-S21.1	2-MODE SELECTOR	31			
EXT-S21.1	3-MODE SELECTOR	31			
I/Ox	Digital I/O Base module	51.2			
I/Ox	Relay I/O Add on module	51.8			
I/Ox	Digital I/O Add on module	51.4			
I/Ox	Analog I/O Add on module	51.6			
A32	Profi/Ethernet	111			
A61	Option: REMOTE SERVICE BOX DSQC680	54			
A41.1	MAIN SERVO DRIVE UNIT	120.1			

We reserve all rights in this document and in the information contained therein. Reproduction, use or disclosure to third parties without express authority is strictly forbidden. © Copyright ABB

We reserve all rights in this document and in the information contained therein. Reproduction, use or disclosure to third parties without express authority is strictly forbidden. © Copyright ABB

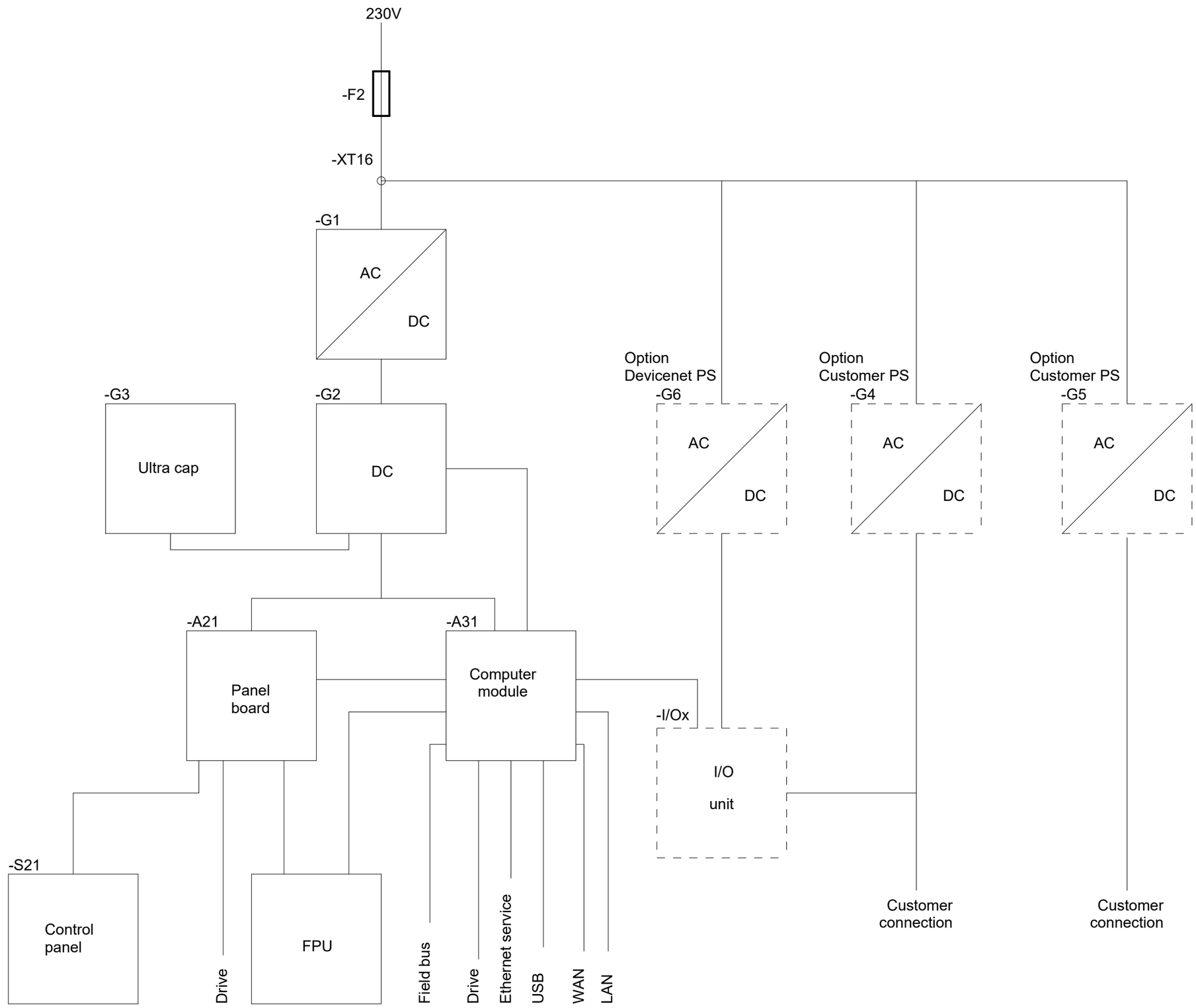

Latest revision:		Lab/Office: RA/RDP	IRC5 DESIGN Rel: 24:B BLOCK DIAGRAM CONTROL MODULE	Status: APPROVED	Plant: = Location: + Sublocation: +
Prepared by, date: A Hägglund	Approved by, date: S Hällgren 2024-03-18			Document no. 3HAC024480-011	Rev. Ind 18

Page 13
Next 14
Total 164

We reserve all rights in this document and in the information contained therein. Reproduction, use or disclosure to third parties without express authority is strictly forbidden. © Copyright ABB

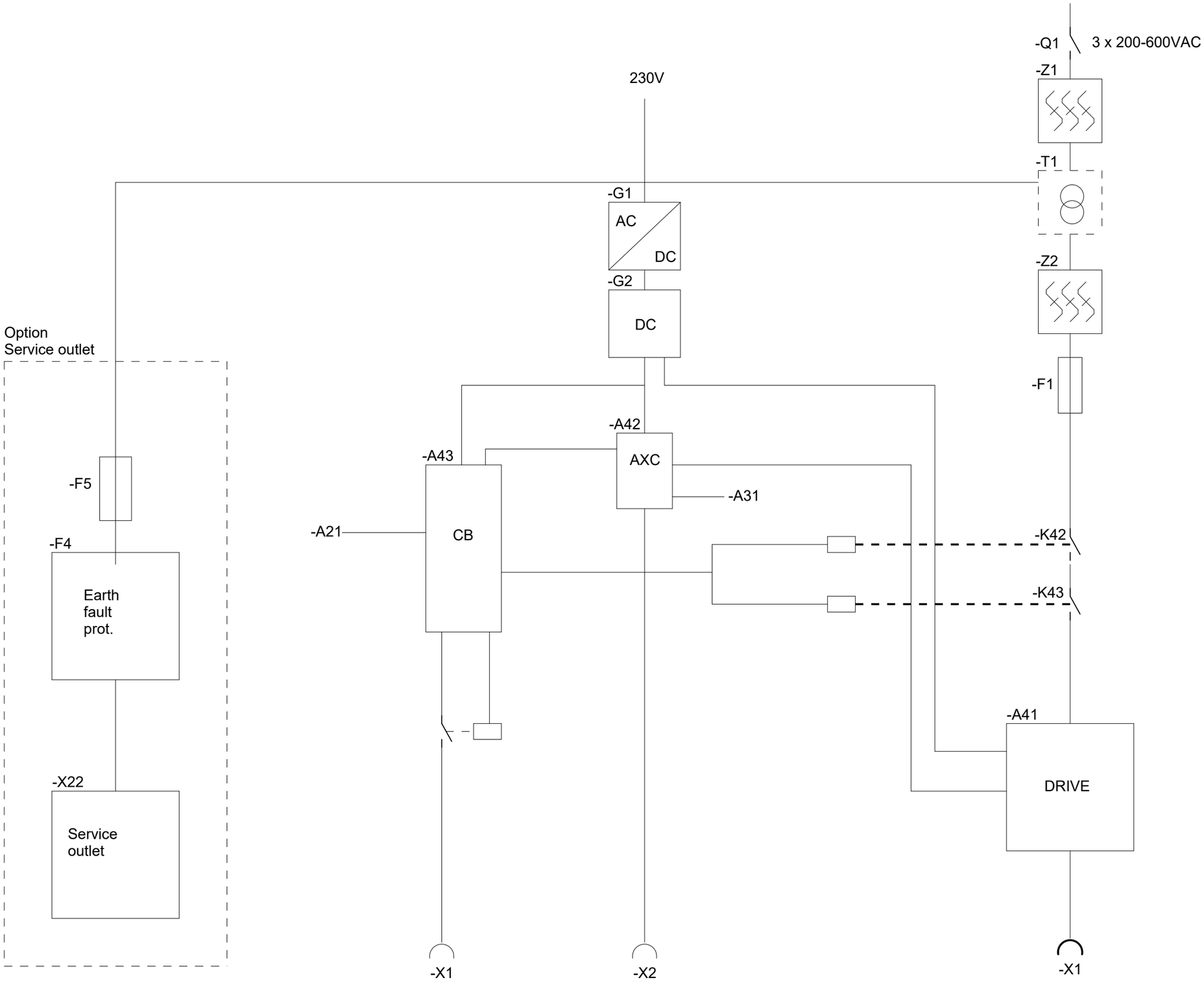

Latest revision:		ABB	Lab/Office: RA/RDP	IRC5 DESIGN Rel: 24:B BLOCK DIAGRAM SINGLE DRIVE MODULE	Status: APPROVED	Plant: = Location: + Sublocation: +
Prepared by, date: A Hägglund	Approved by, date: S Hällgren 2024-03-18				Document no. 3HAC024480-011	Rev. Ind 18
						Page 14 Next 15 Total 164

We reserve all rights in this document and in the information contained therein. Reproduction, use or disclosure to third parties without express authority is strictly forbidden. © Copyright ABB

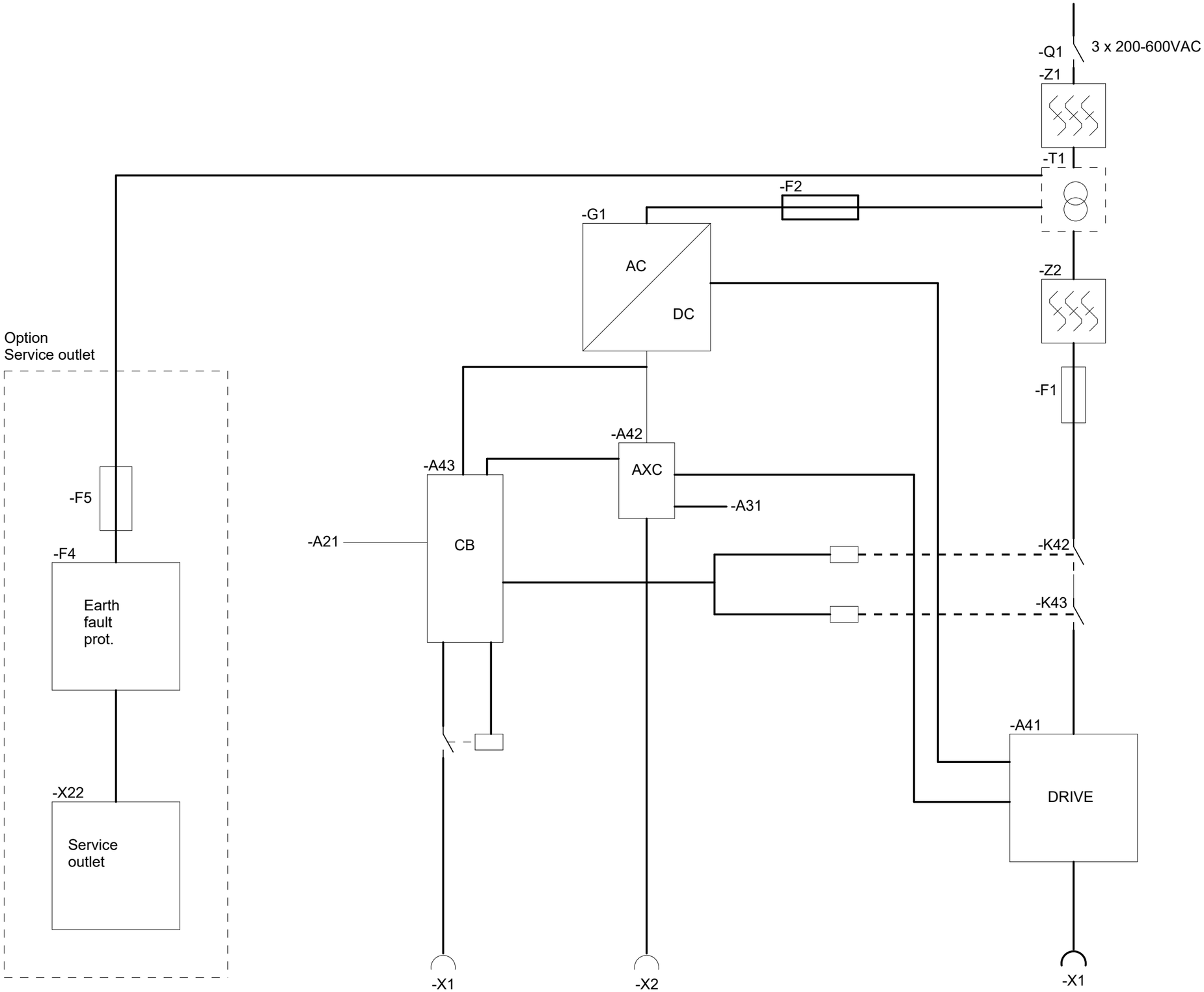

Latest revision:		ABB	Lab/Office: RA/RDP	IRC5 DESIGN Rel: 24:B BLOCK DIAGRAM DRIVE MODULE	Status: APPROVED	Plant: = Location: + Sublocation: +
Prepared by, date: A Hägglund	Approved by, date: S Hällgren 2024-03-18				Document no. 3HAC024480-011	Rev. Ind 18

Page 15
Next 16
Total 164

We reserve all rights in this document and in the information contained therein. Reproduction, use or disclosure to third parties without express authority is strictly forbidden. © Copyright ABB

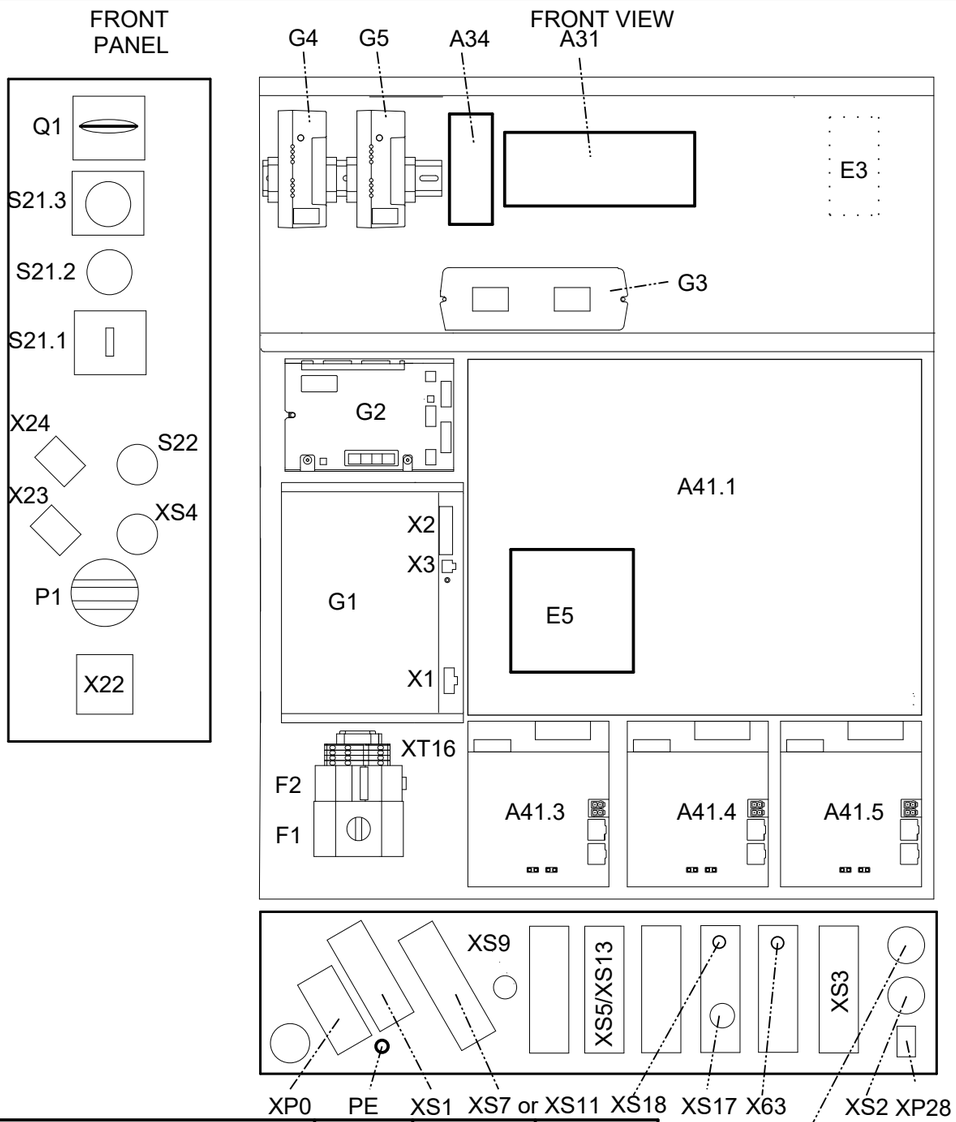

Opt. inside door with I/O and ETHERNET switch

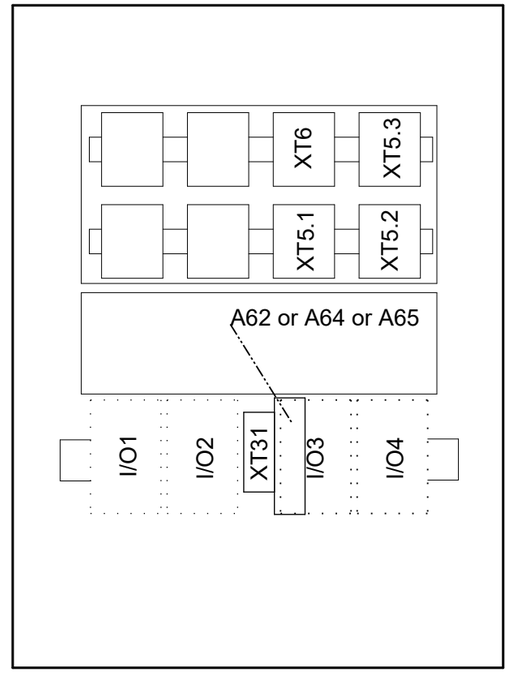

DSQC1030 Opt 1541-1/-2

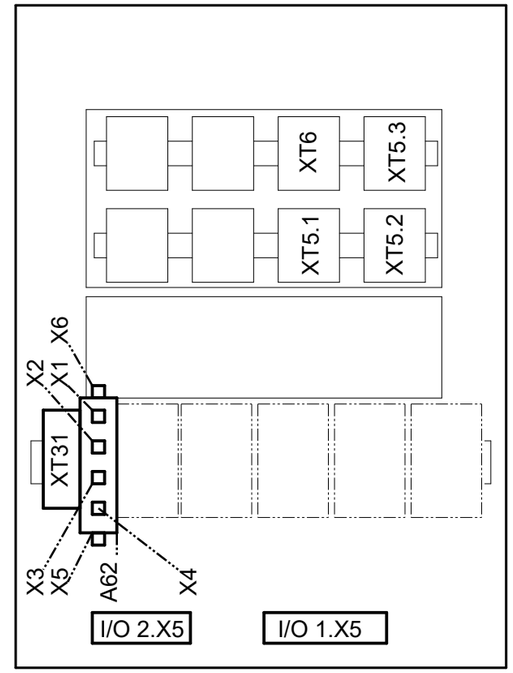

DSQC1031 Opt 1542-1/-2

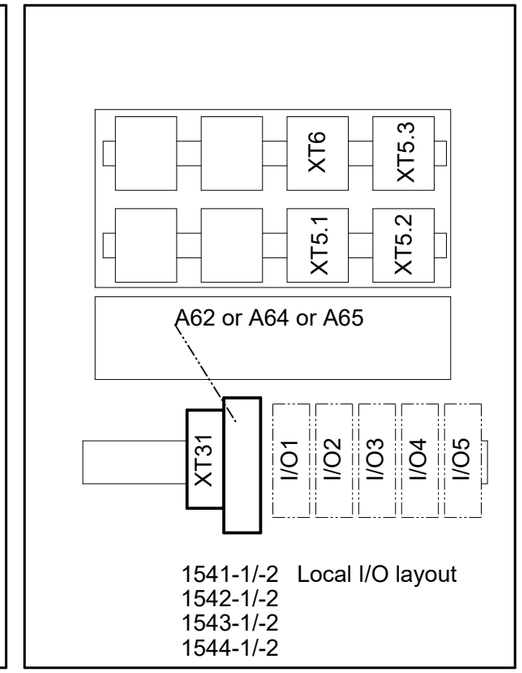

DSQC1032 Opt 1543-1/-2

DSQC1033 Opt 1544-1/-2

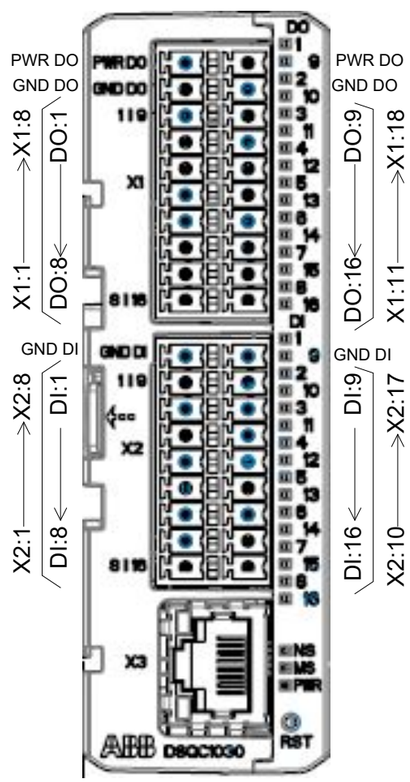

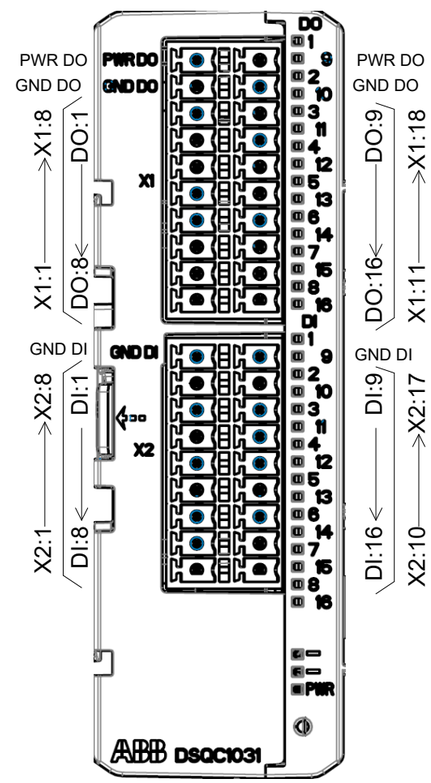

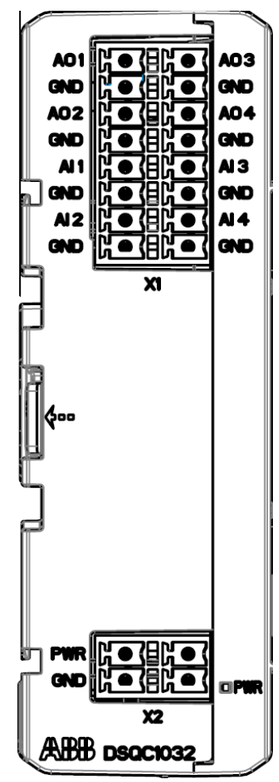

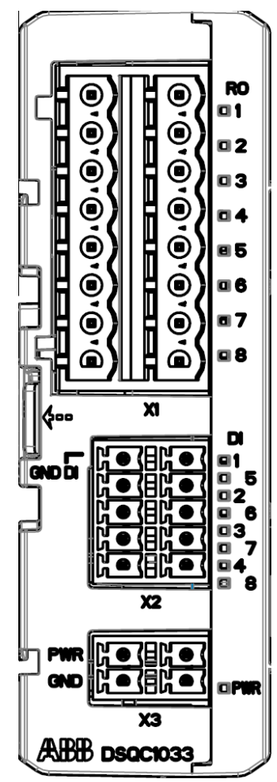

Denomination	Unit	Pos. No	Opt. No
Digital 24 VDC		I/O 1-4	716-1
AD Combi I/O		I/O 1-4	717-1
Digital with relay		I/O 1-4	718-1
Analog 4 in/4 out		I/O 1-4	719-1
Profibus DP Slave		I/O 1-4	720-1
Interbus-S Slave		I/O 1-4	722-1
CC-link slave		I/O 1-4	723-1
ENC unit		I/O 1-4	726-1
Digital Base 16in/16out		I/O 1	1541-1/-2
Digital Add on 16in/16out		I/O 2-5	1542-1/-2
Analogue Add on 4in/4out		I/O 2-5	1543-1/-2
Relay Add on 8RO/8DI		I/O 2-5	1544-1/-2
Ethernet switch	A34		604-1/-2
Ethernet switch	A62		901-1
Ethernet switch	A64		1341-1
Ethernet switch	A65		941-1

Latest revision:

Prepared by, date: A Hägglund | Approved by, date: S Hällgren 2024-03-18

ABB | Lab/Office: RA/RDP

IRC5 DESIGN Rel: 24:B
FRONT VIEW OF SINGLE CABINET MDU HV

Status: APPROVED

Plant: =
Location: +
Sublocation: +

Document no. 3HAC024480-011 | Rev. Ind 18

Wire no.	Designation	Terminal	Remark.	Application	Document.
147	XT31	1	+	G4 DSQC609	3HAC066749-002
148	XT31	5	-		
147	XT31	1	+	A62.X7	3HAC035136-002
148	XT31	5	-		
147	XT31	2	+	G5 DSQC609	
148	XT31	6	-		
147	XT31	3	+	G7 DSQC609	
148	XT31	7	-		
193	XT31	4	+	Harn I/O/ Devicenet supply	
194	XT31	8	-		
193	XT31	9	+	Harn I/O/ Devicenet supply	3HAC028588-002
194	XT31	10	-		
247	XT31	1	+	G2.x4	3HAC028581-001
248	XT31	5	-		
295	XT31	2	+	G4.x2	3HAC024979-027
296	XT31	6	-		
295	XT31	3	+	G5.x2	3HAC024979-027
296	XT31	7	-		
297	XT31	9	+	G6	3HAC024979-028
298	XT31	10	-		3HAC024527-001
787	XT31	5	-	Sensor connection	3HAC066749-002
Bu	XT31	5	-		
785	XT31	1	+		
Rd/Bn	XT31	1	+		
703 or 775	XT31	1	+	Assembly set I/O IRC5	3HAC060971-002
704 or 776	XT31	5	-		
745	XT31	1	+	Remote Service SC	3HAC031252-002
746	XT31	5	-		
747	XT31	1	+	DC in	3HAC037747-002
748	XT31	5	-	DC in	
764	XT31	2	+	Camera 1 and 3	3HAC046782-002
765	XT31	6	-		
766	XT31	2	+	Camera 2	3HAC046782-002
767	XT31	6	-		
775 or 703	XT31	1	+	Assembly set I/O IRC5	3HAC060971-002
776 or 704	XT31	5	-		
777	XT31	2	+		3HAC060971-002
778	XT31	6	-		
779	XT31	2	+		3HAC060971-002
780	XT31	6	-		
901	XT31	1	+	Assembly set I/O IRC5, VW	3HAC066590-002
902	XT31	5	-		
1032	XT31	1 alt 2	+	Euromap	3HAC025481-003
			-		
901	XT31	1	+	Assembly set I/O IRC5, VW	3HAC066590-002
902	XT31	5	-		
901	XT31	1	+	Assembly set I/O IRC5, VW	3HAC066590-002
902	XT31	5	-		
1041	XT31	1	+	(Process interface board PIB A57 Opt.901-1 902-1)	3HAC035136-002
1042	XT31	2	-		
1043	XT31	1	+	(Ethernet switch A62 Opt.901-1 or Ethernet switch A64 or Ethernet switch A65)	3HAC046782-002
1044	XT31	5	-		3HAC047120-002
1046 and 1055	XT31	5 alt. 6	-	Euromap	3HAC025481-003

Wire no.	Designation	Terminal	Remark.	Application	Document.
1417	XT31	2	+	Process interface ARISTOMIG safety interlock	3HEA803113-001
1422		6	-		
1429		6	-		

XT31: 1 (Rd/Bn, 147, 247, 703, 705, 745,747, 775, 785, 901,1032, 1041, 1043)

XT31:2 (147, 295, 764, 766, 777, 779, 1032, 1042.

XT31:3 (147, 295)

XT31:4 (193)

XT31:5 (Bu, 148, 248, 704, 746, 748, 776, 787, 902, 1044, 1046, 1055)

XT31:6 (148, 296, 765, 767, 778, 780, 1046, 1055)

XT31:7 (148, 296)

XT31:8 (194)

XT31:9 (193, 297)

XT31:10 (194, 298)

We reserve all rights in this document and in the information contained therein. Reproduction, use or disclosure to third parties without express authority is strictly forbidden. © Copyright ABB

We reserve all rights in this document and in the information contained therein. Reproduction, use or disclosure to third parties without express authority is strictly forbidden. © Copyright ABB

FRONT VIEW
MAIN DRIVE UNIT FOR IRB 120 - 1600
LV Low voltage

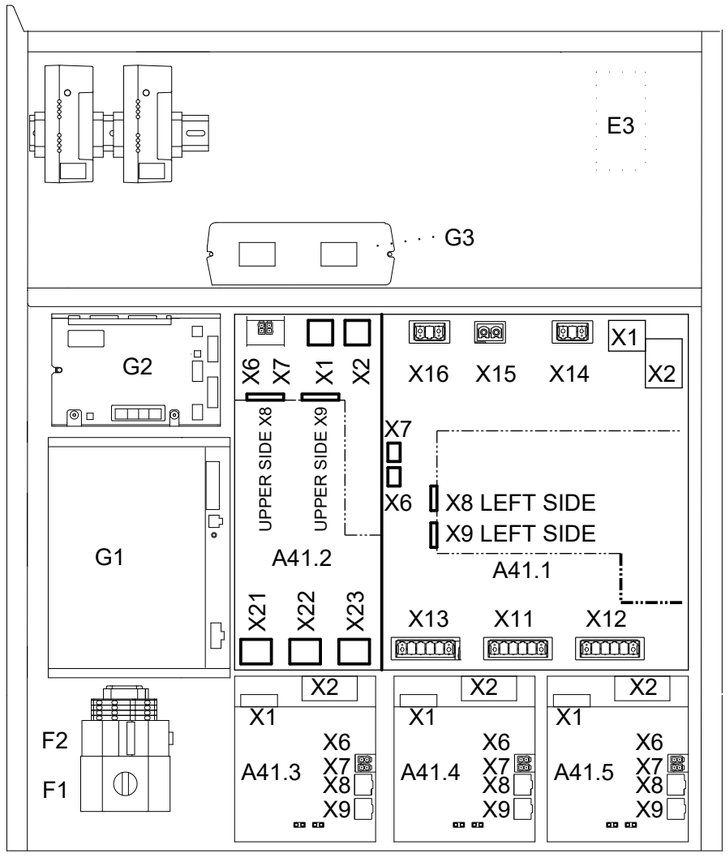

FRONT VIEW
MAIN DRIVE UNIT FOR IRB 2400 - 87XX
HV High voltage

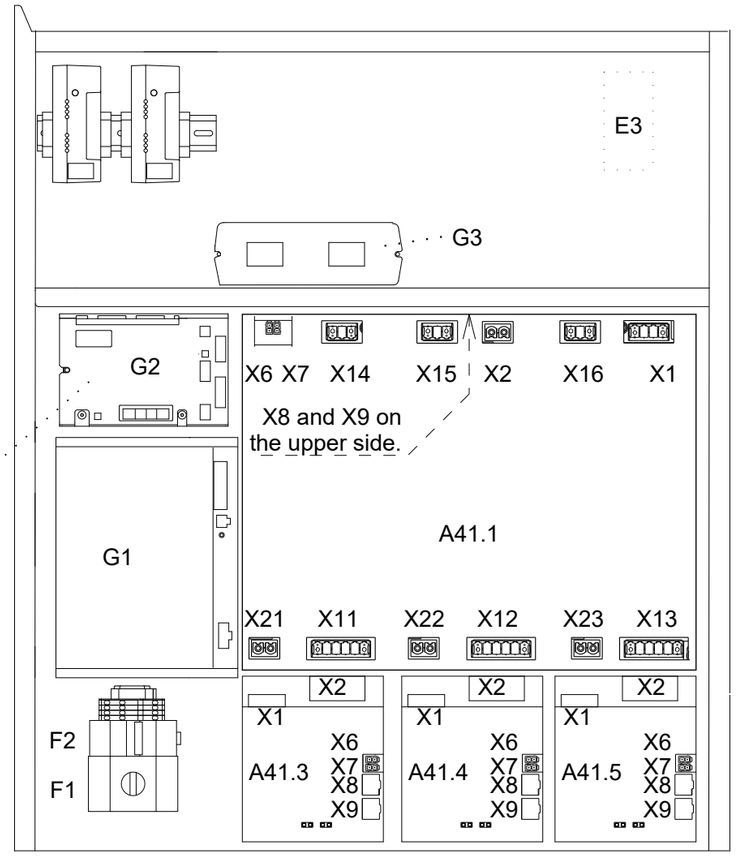

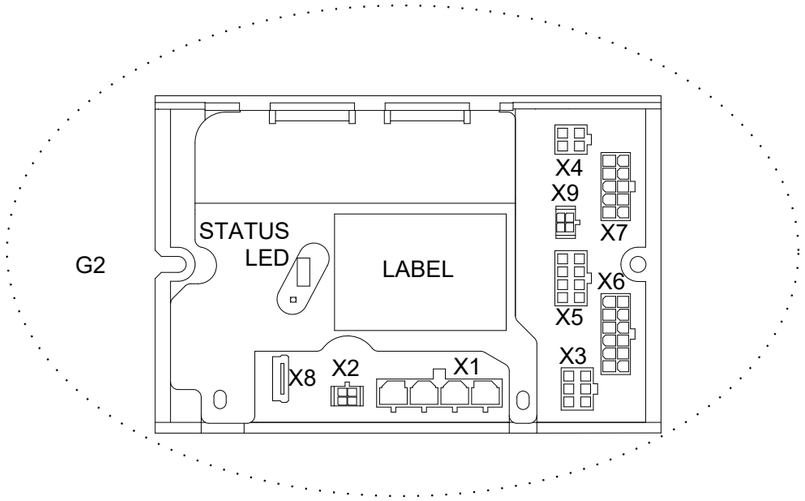

Latest revision:		ABB	Lab/Office: RA/RDP	IRC5 DESIGN Rel: 24:B FRONT VIEW OF SINGLE CABINET MDU LV and HV	Status: APPROVED	Plant: = Location: + Sublocation: +
Prepared by, date: A Hägglund	Approved by, date: S Hällgren 2024-03-18				Document no. 3HAC024480-011	Rev. Ind 18

We reserve all rights in this document and in the information contained therein. Reproduction, use or disclosure to third parties without express authority is strictly forbidden. © Copyright ABB

LEFT VIEW WITH
FLANGE DISCONNECT

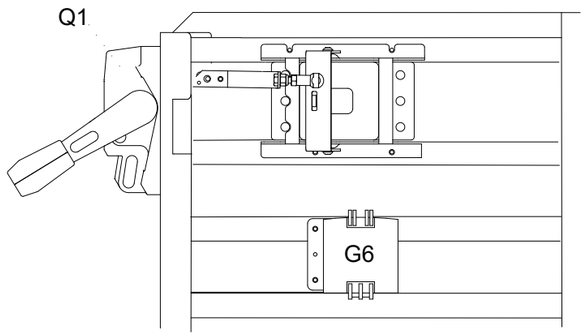

LEFT VIEW

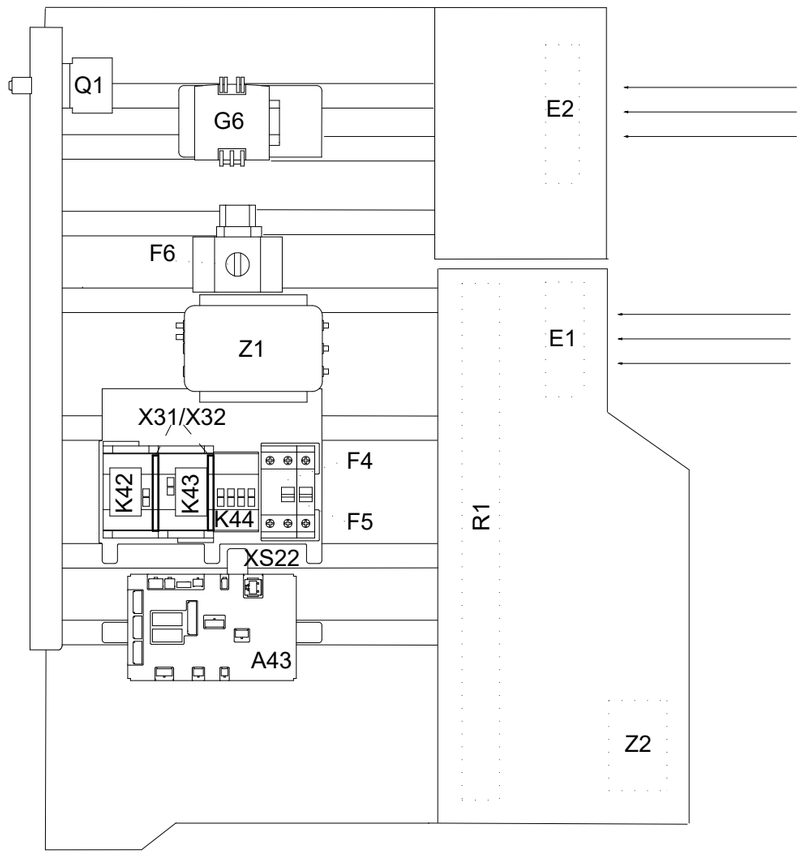

RIGHT VIEW

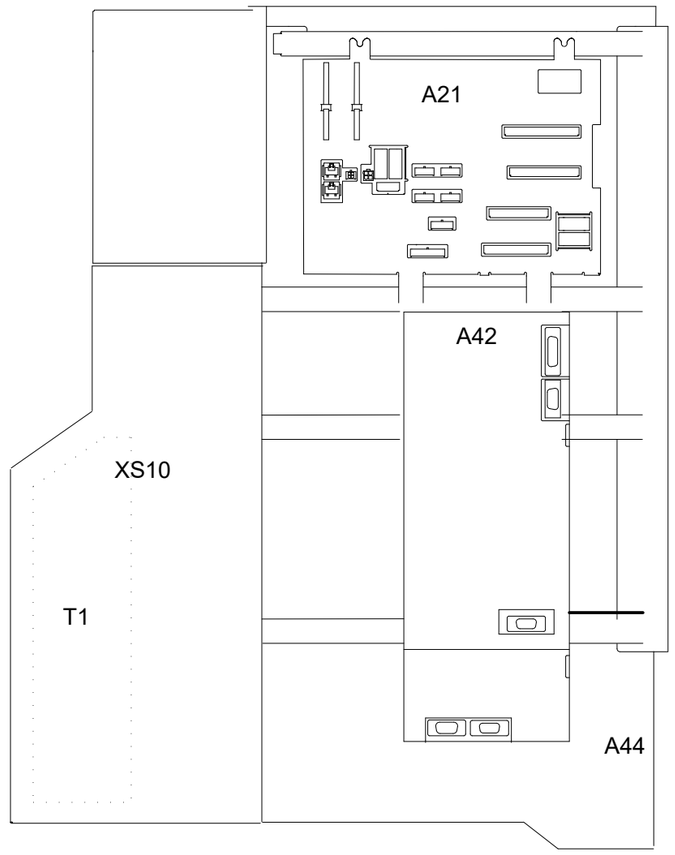

Latest revision:		ABB	Lab/Office: RA/RDP	IRC5 DESIGN Rel: 24:B SIDE VIEWS OF SINGLE CABINET	Status: APPROVED	Plant: = Location: + Sublocation: +
Prepared by, date: A Hägglund	Approved by, date: S Hällgren 2024-03-18				Document no. 3HAC024480-011	Rev. Ind 18

We reserve all rights in this document and in the information contained therein. Reproduction, use or disclosure to third parties without express authority is strictly forbidden. © Copyright ABB

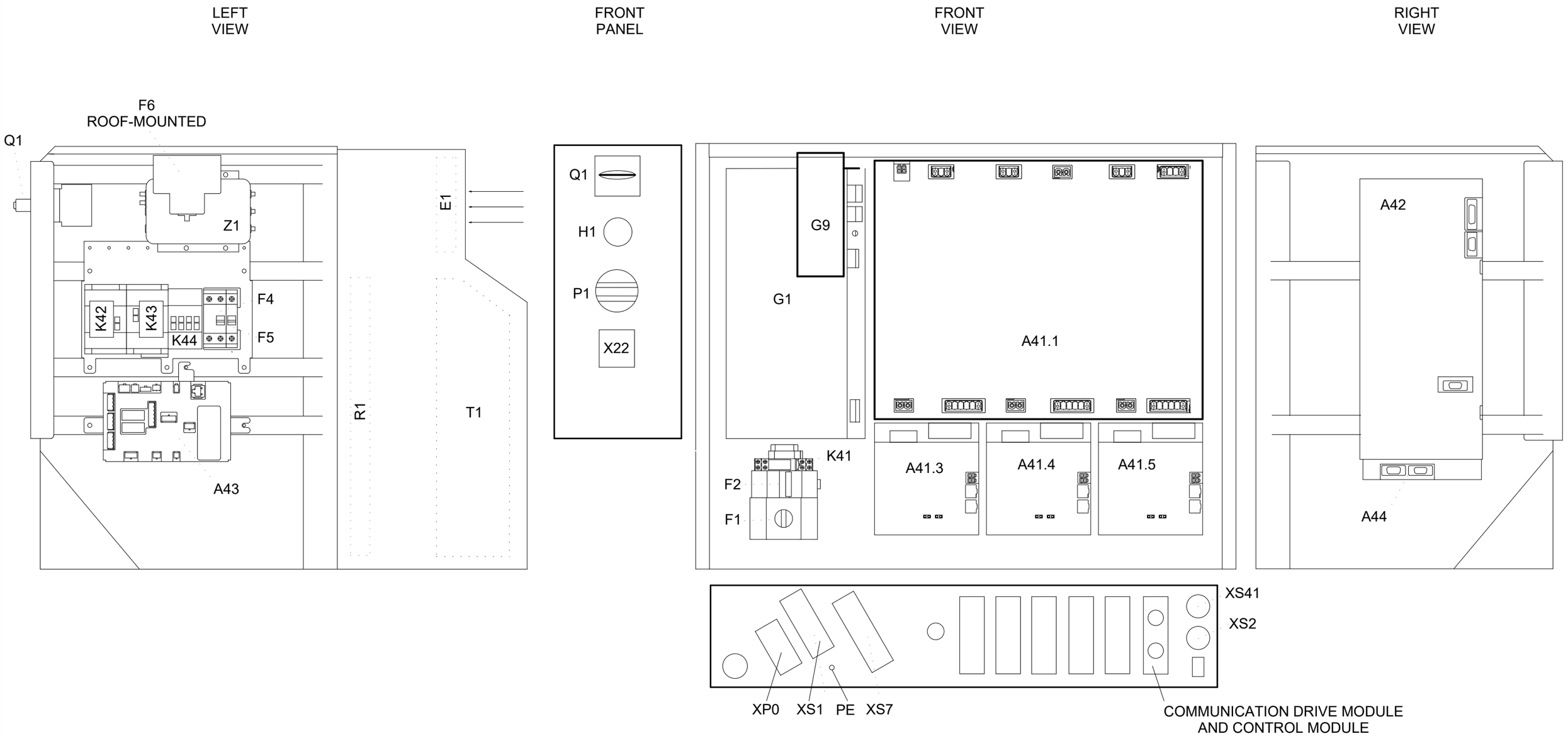

Latest revision:		Lab/Office: RA/RDP	IRC5 DESIGN Rel: 24:B VIEW OF DRIVE MODULE CABINET	Status: APPROVED	Plant: = Location: + Sublocation: +
				Document no. 3HAC024480-011	Rev. Ind 18
					Page 19 Next 20 Total 164
Prepared by, date: A Hägglund	Approved by, date: S Hällgren 2024-03-18				

We reserve all rights in this document and in the information contained therein. Reproduction, use or disclosure to third parties without express authority is strictly forbidden. © Copyright ABB

PANEL
BOARD
A21

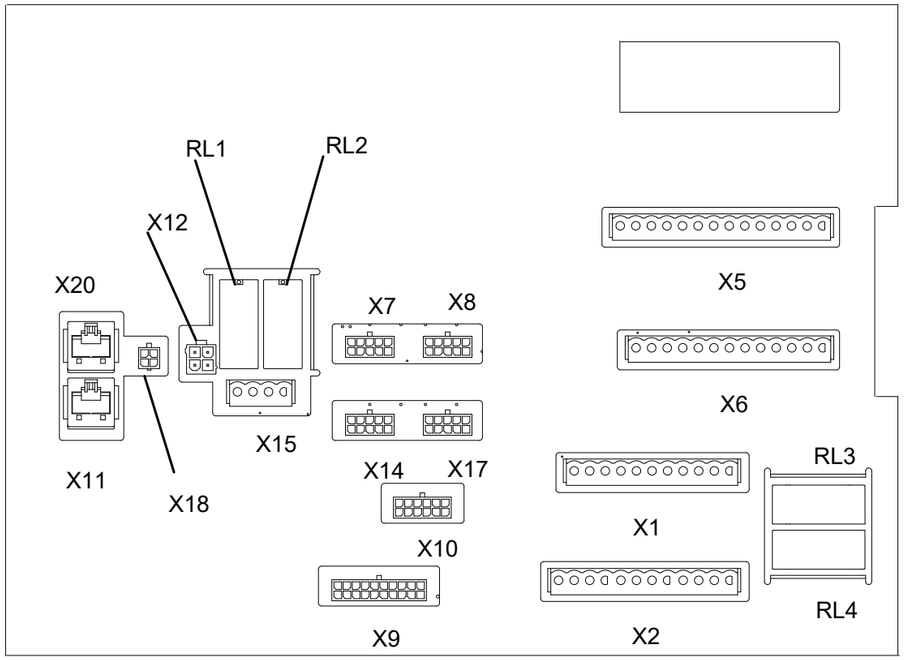

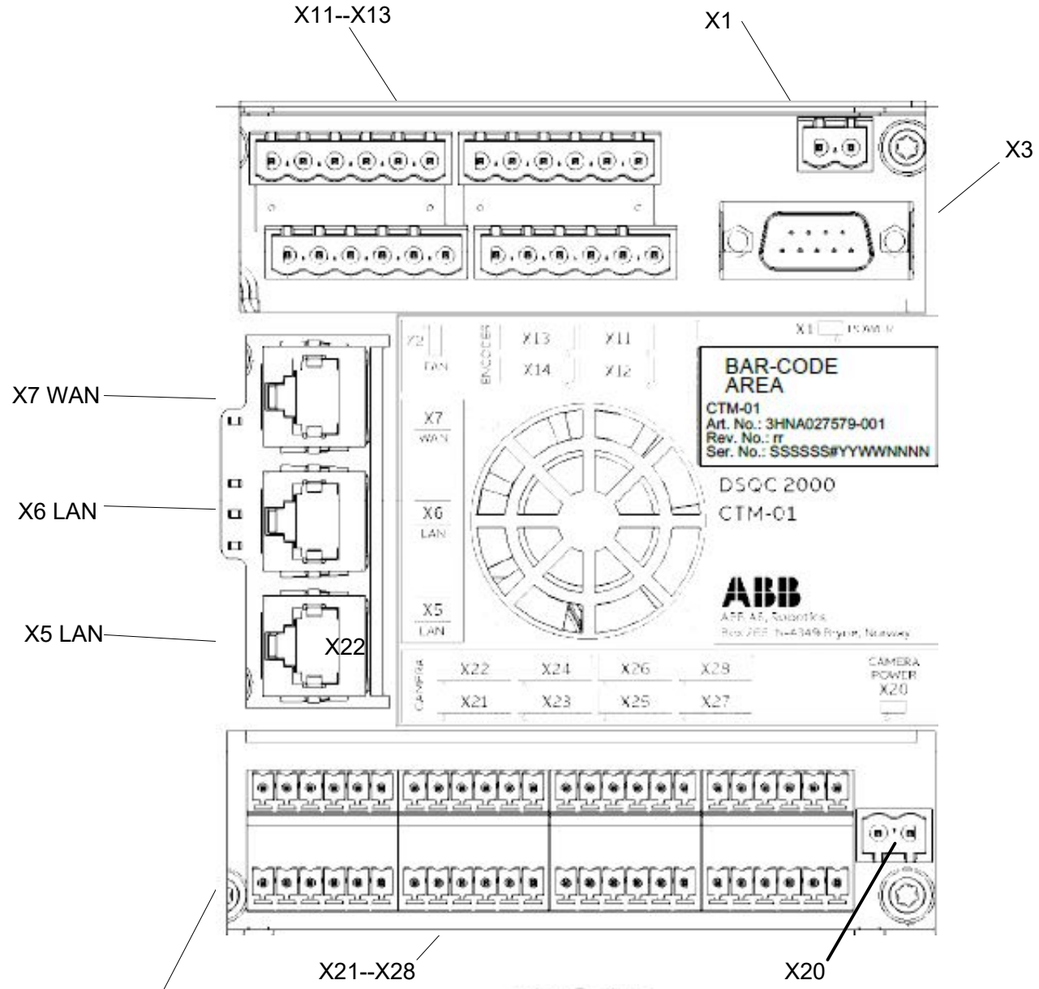

A67 CMT
on the door

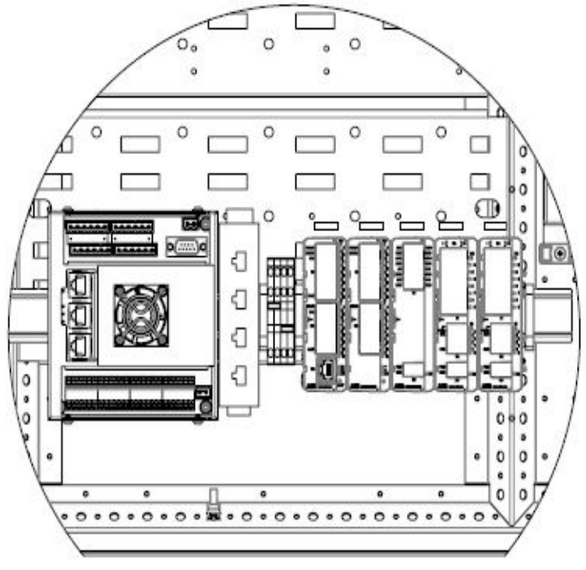

Latest revision:		Lab/Office: RA/RDP	IRC5 DESIGN Rel: 24:B VIEW OF PANEL BOARD CONVEYOR TRACKING	Status: APPROVED	Plant: = Location: + Sublocation: +
Prepared by, date: A Hägglund	Approved by, date: S Hällgren 2024-03-18			Document no. 3HAC024480-011	Rev. Ind 18
					Page 20 Next 21 Total 164

We reserve all rights in this document and in the information contained therein. Reproduction, use or disclosure to third parties without express authority is strictly forbidden. © Copyright ABB

A42 Axis computer unit

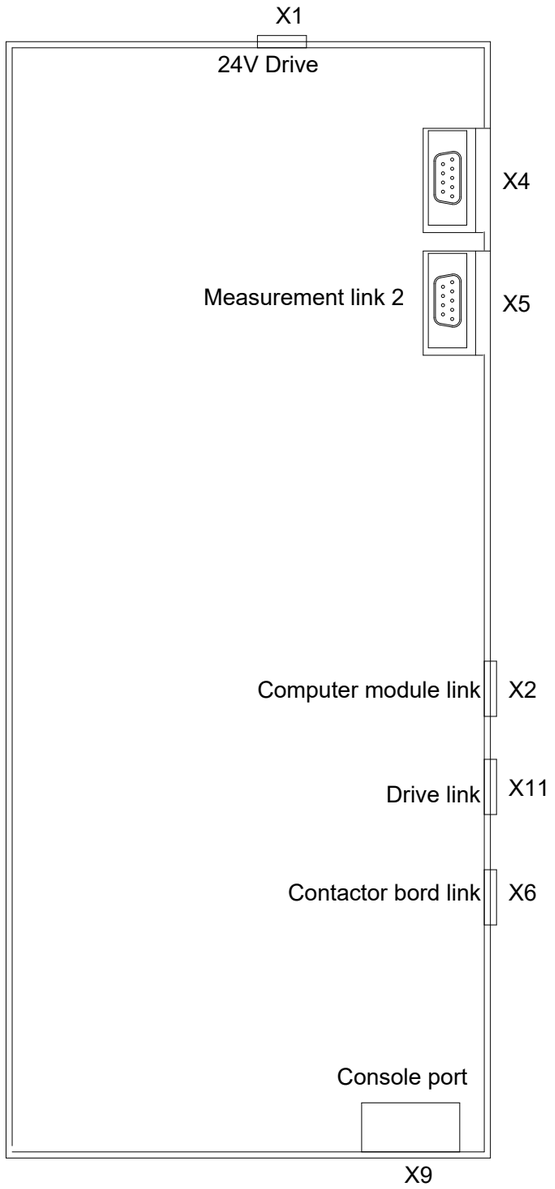

A43 Contactor unit

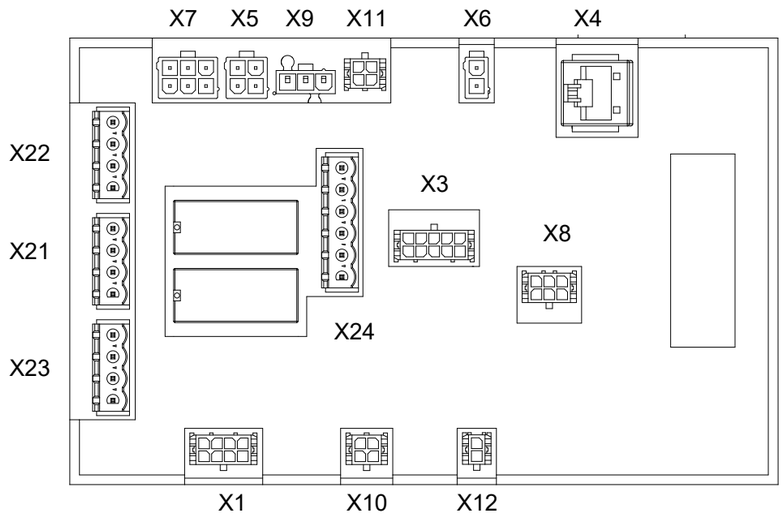

A44.2 Safe move

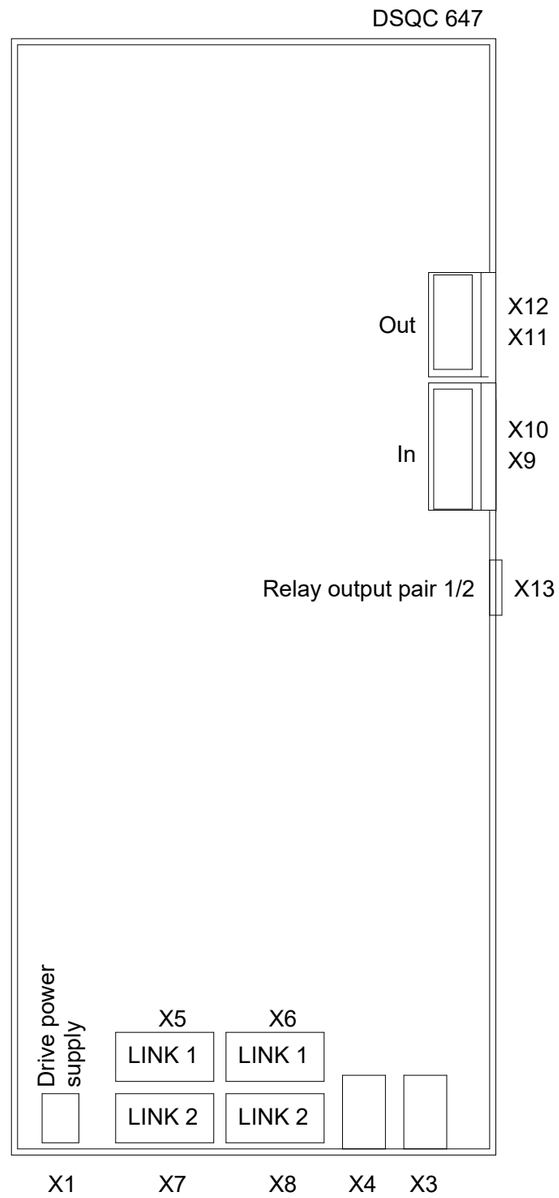

A44.1 EPS unit

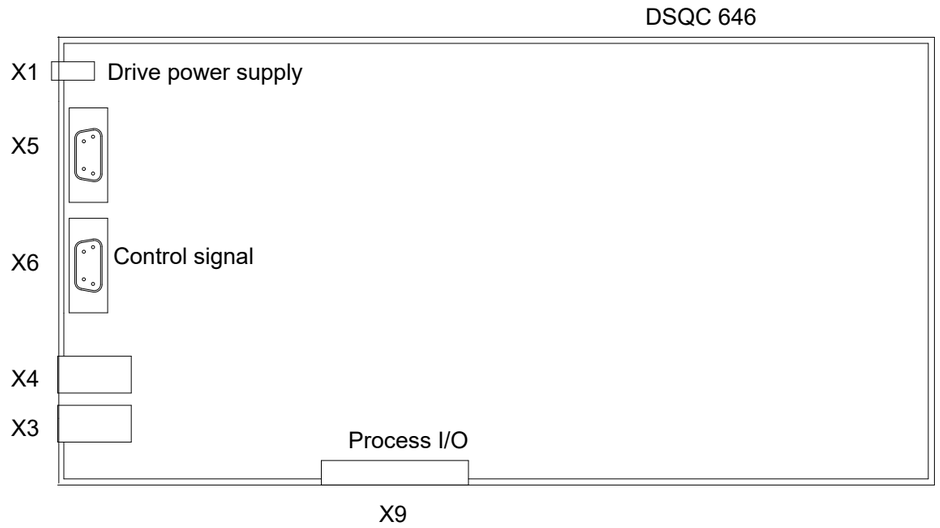

Latest revision:		Lab/Office: RA/RDP	IRC5 DESIGN Rel: 24:B VIEW OF CONTACTOR & AXIS COMPUTER UNIT	Status: APPROVED	Plant: = Location: + Sublocation: +
Prepared by, date: A Hägglund	Approved by, date: S Hällgren 2024-03-18			Document no. 3HAC024480-011	Rev. Ind 18

We reserve all rights in this document and in the information contained therein. Reproduction, use or disclosure to third parties without express authority is strictly forbidden. © Copyright ABB

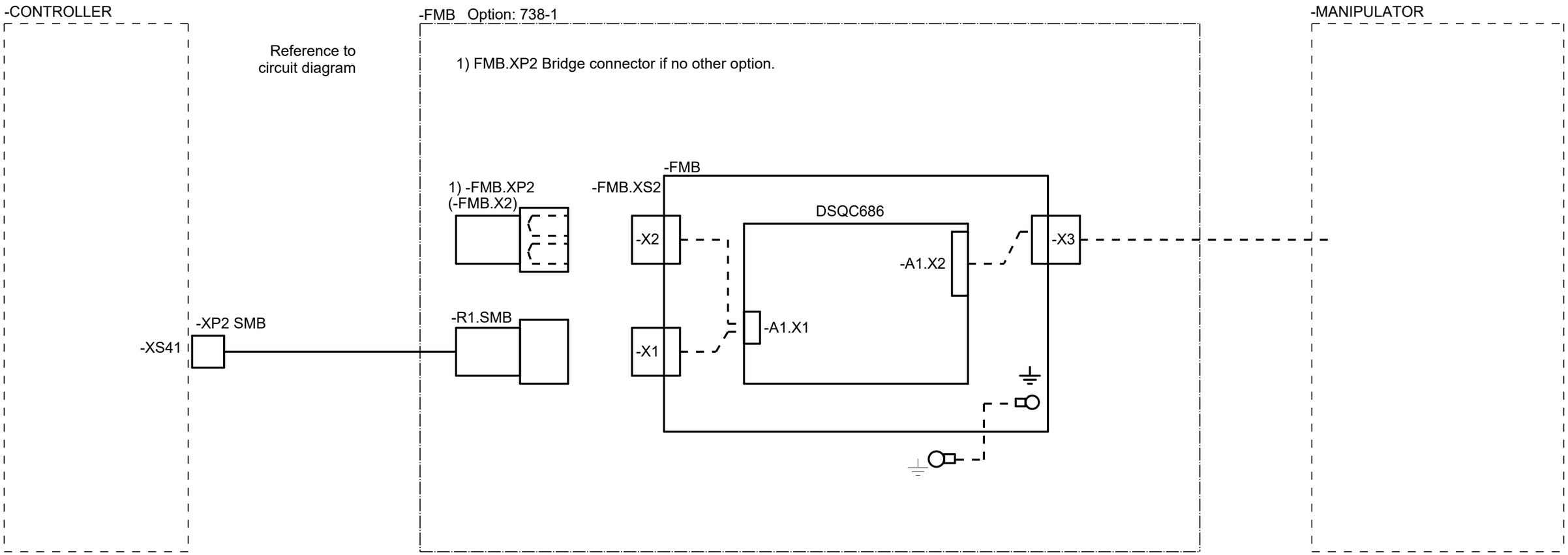

Latest revision:		Lab/Office: RA/RDP	IRC5 DESIGN Rel: 24:B VIEW OF VOLTAGE MEARSUREMENT BOX	Status: APPROVED	Plant: = Location: + Sublocation: +	
				Document no. 3HAC024480-011	Rev. Ind 18	Page 22 Next 23 Total 164
Prepared by, date: A Hägglund	Approved by, date: S Hällgren 2024-03-18					

We reserve all rights in this document and in the information contained therein. Reproduction, use or disclosure to third parties without express authority is strictly forbidden. © Copyright ABB

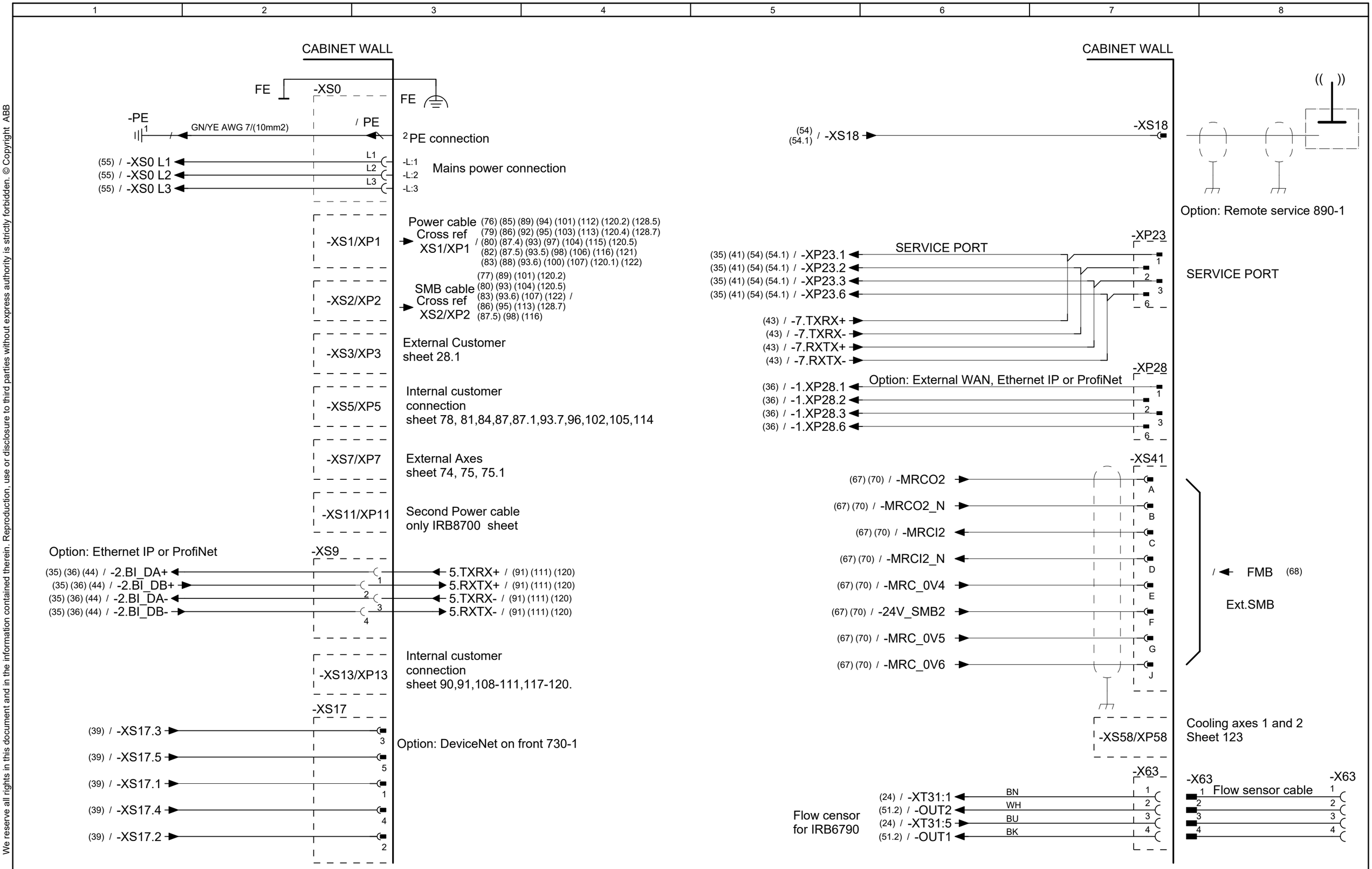

Latest revision:		Lab/Office: RA/RDP	IRC5 DESIGN Rel: 24:B CONTACT AT THE CABINET WALL	Status: APPROVED	Plant: = Location: + Sublocation: +
Prepared by, date: A Hägglund	Approved by, date: S Hällgren 2024-03-18			Document no. 3HAC024480-011	Rev. Ind 18
				Page 23	Next 24
				Total 164	

We reserve all rights in this document and in the information contained therein. Reproduction, use or disclosure to third parties without express authority is strictly forbidden. © Copyright ABB

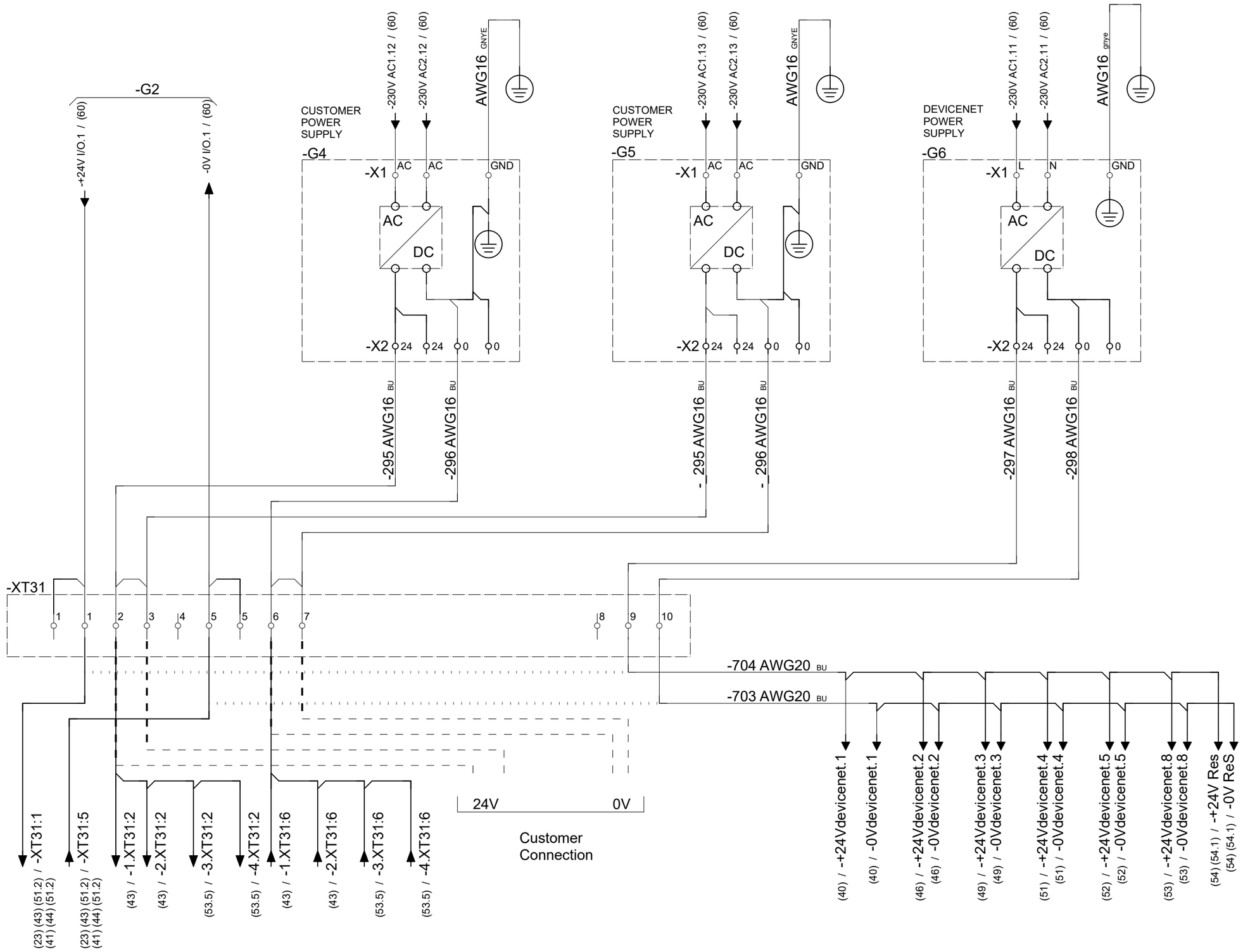

Latest revision:		Lab/Office: RA/RDP	IRC5 DESIGN Rel: 24:B OPT:POWER SUPPLY DSQC609 XT31, G4, G5, G6	Status: APPROVED	Plant: = Location: + Sublocation: +	
				Document no. 3HAC024480-011	Rev. Ind 18	Page 24 Next 25 Total 164
Prepared by, date: A Hägglund	Approved by, date: S Hällgren 2024-03-18					

We reserve all rights in this document and in the information contained therein. Reproduction, use or disclosure to third parties without express authority is strictly forbidden. © Copyright ABB

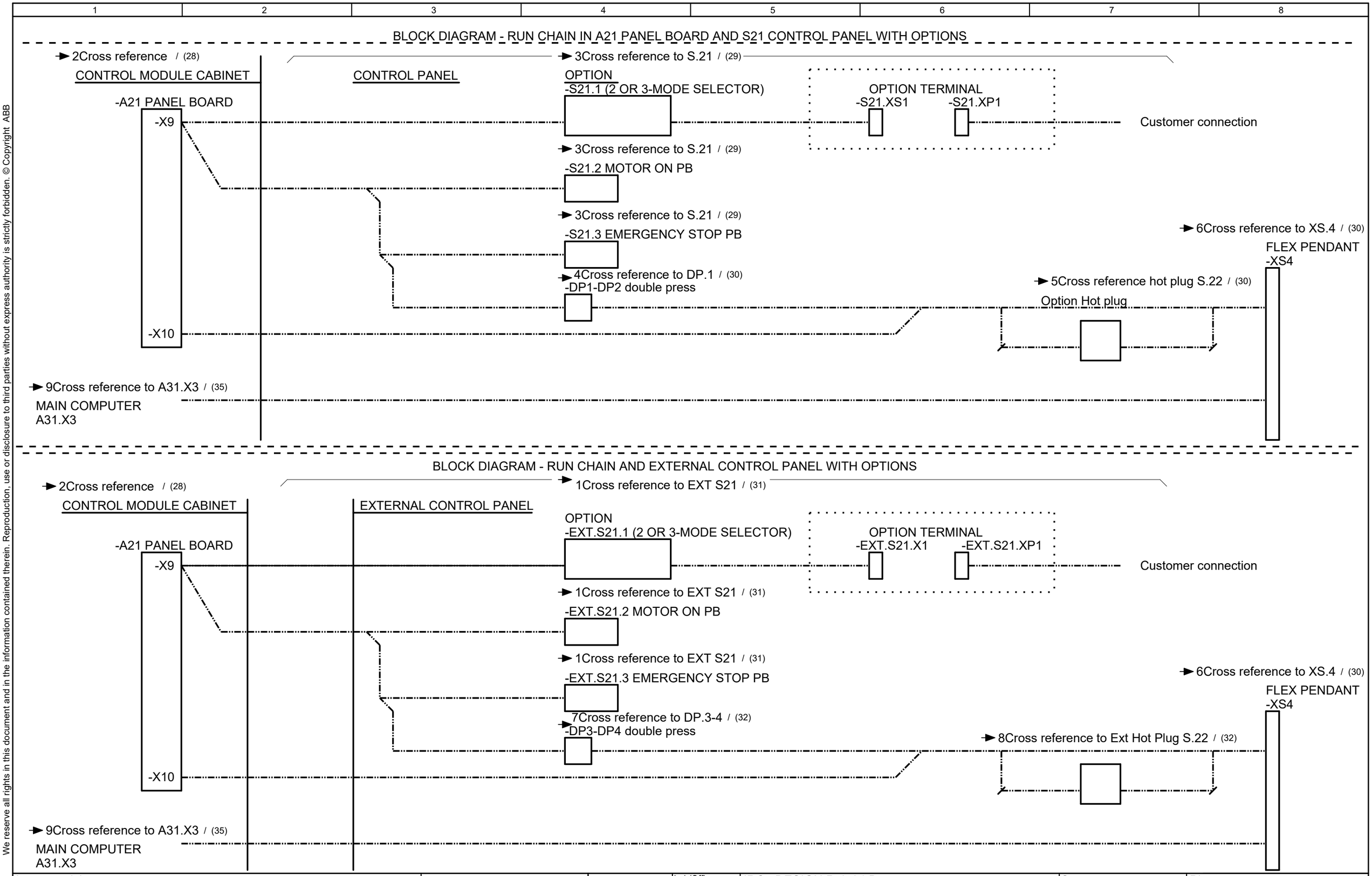

Latest revision:	ABB	Lab/Office: RA/RDP	IRC5 DESIGN Rel: 24:B RUN CHAIN block diagram in PANEL BOARD A21 and CONTROL PANEL S21	Status: APPROVED	Plant: = Location: + Sublocation: +
				Document no. 3HAC024480-011	Rev. Ind 18
					Page 25 Next 26 Total 164
Prepared by, date: A Hägglund	Approved by, date: S Hällgren 2024-03-18				

We reserve all rights in this document and in the information contained therein. Reproduction, use or disclosure to third parties without express authority is strictly forbidden. © Copyright ABB

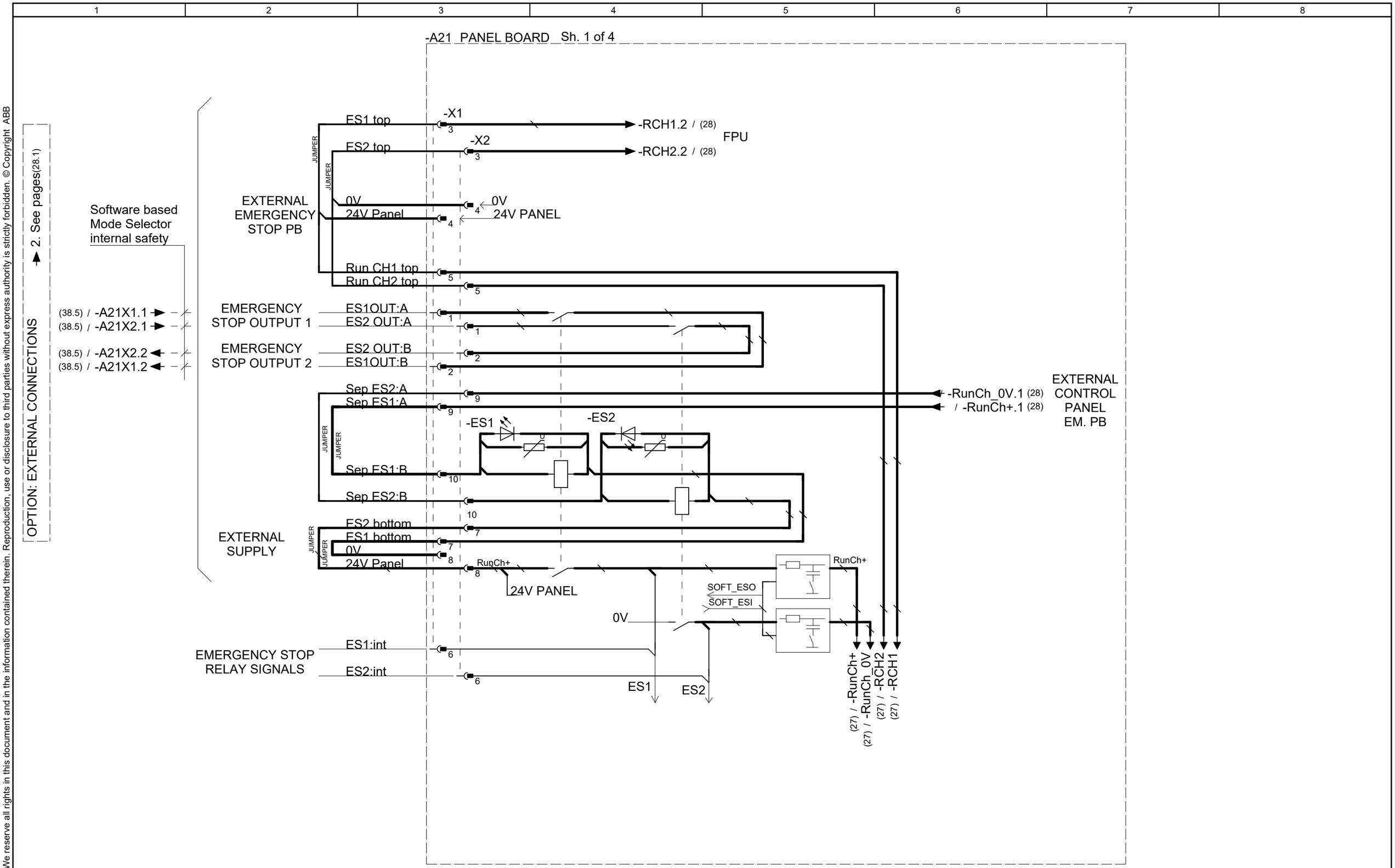

Latest revision:		ABB	Lab/Office: RA/RDP	IRC5 DESIGN Rel: 24:B RUN CHAIN and PANEL BOARD A21 Sh. 1 of 4	Status: APPROVED Plant: = Location: + Sublocation: +
Prepared by, date: A Hägglund	Approved by, date: S Hällgren 2024-03-18				Document no. 3HAC024480-011 Rev. Ind 18 Page 26 Next 27 Total 164

We reserve all rights in this document and in the information contained therein. Reproduction, use or disclosure to third parties without express authority is strictly forbidden. © Copyright ABB

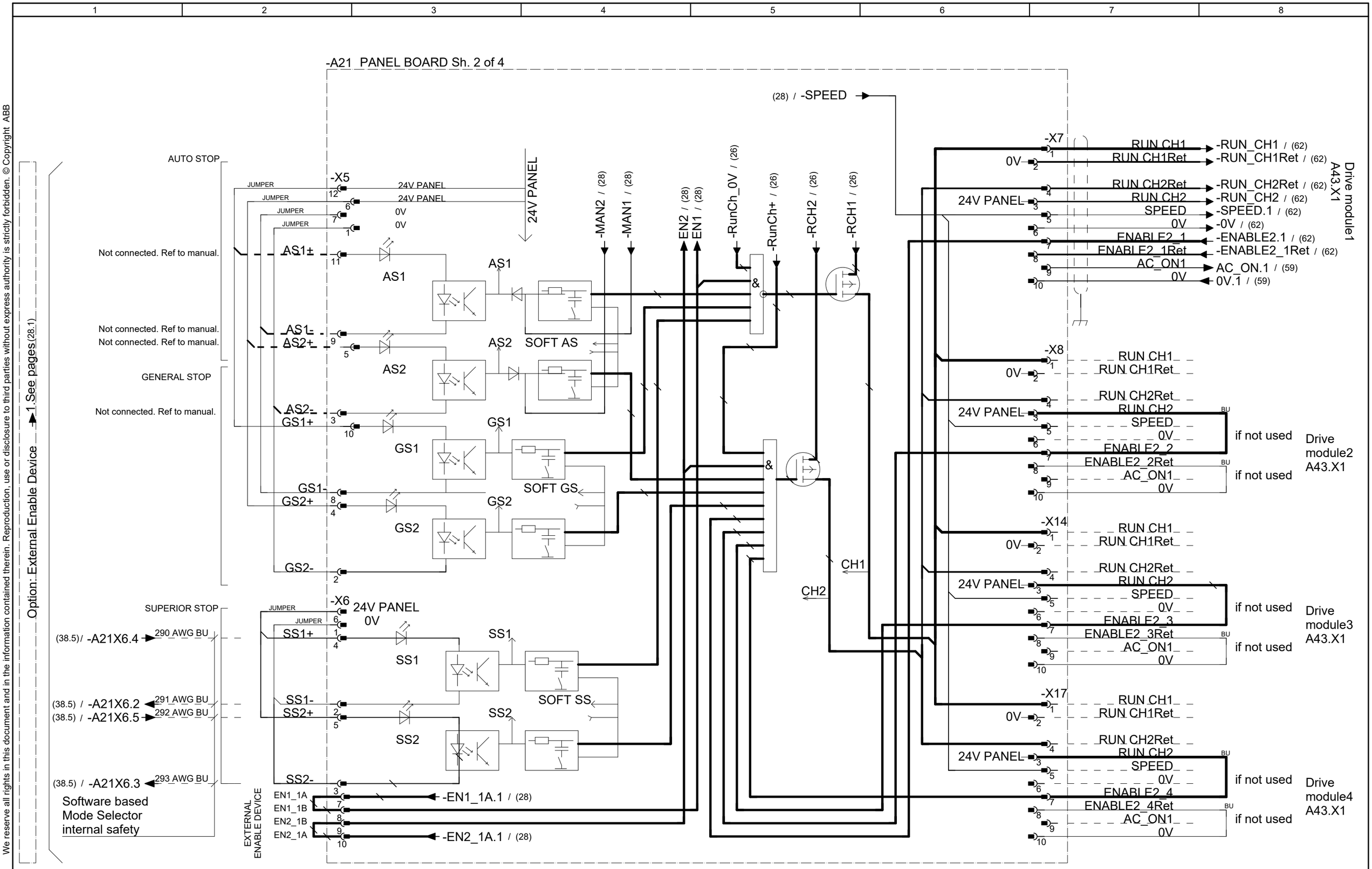

Latest revision:		Lab/Office: RA/RDP	IRC5 DESIGN Rel: 24:B RUN CHAIN and PANEL BOARD A21 Sh. 2 of 4	Status: APPROVED	Plant: = Location: + Sublocation: +
Prepared by, date: A Hägglund	Approved by, date: S Hällgren 2024-03-18			Document no. 3HAC024480-011	Rev. Ind 18
					Page 27 Next 28 Total 164

We reserve all rights in this document and in the information contained therein. Reproduction, use or disclosure to third parties without express authority is strictly forbidden. © Copyright ABB

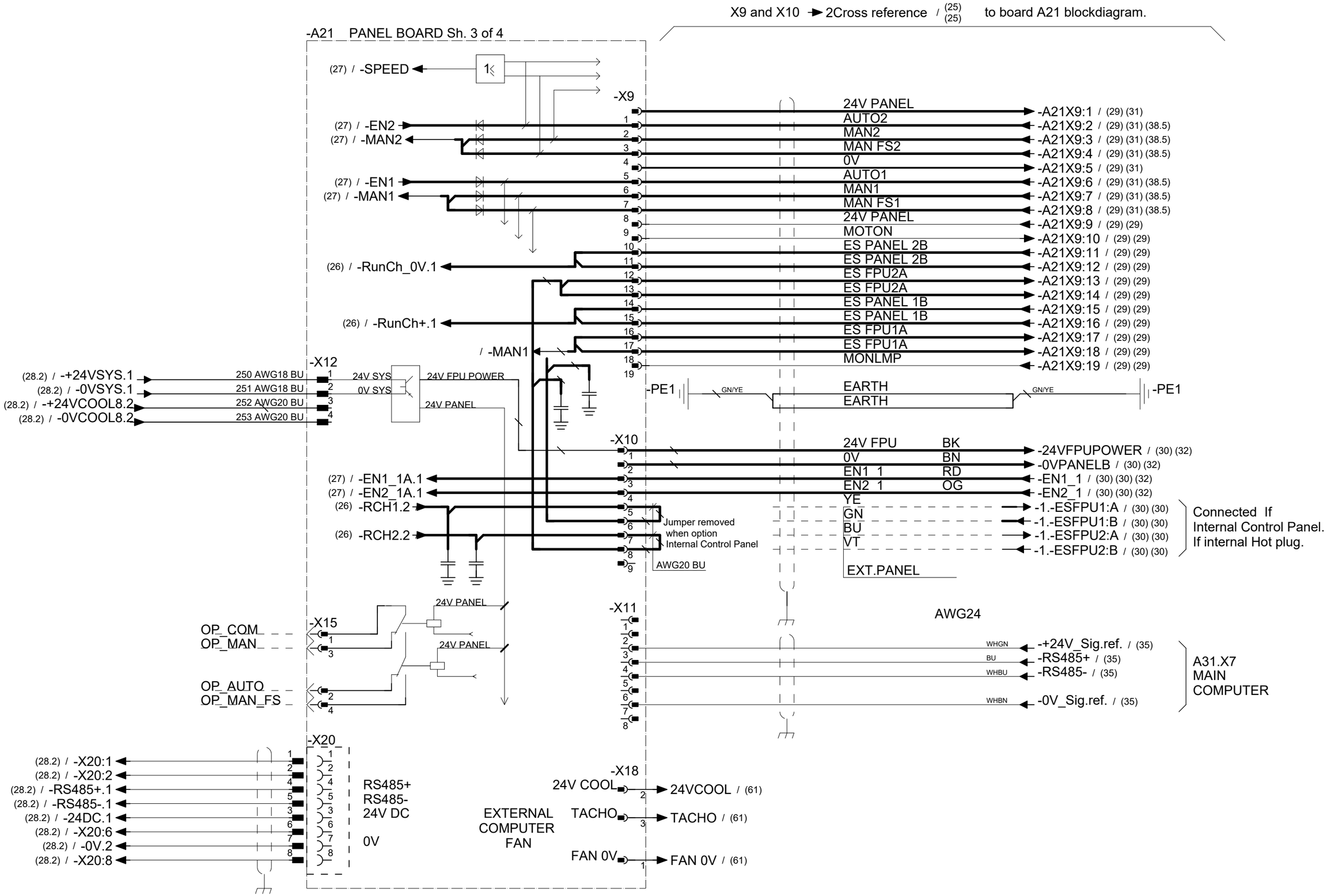

Latest revision:		Lab/Office: RA/RDP	IRC5 DESIGN Rel: 24:B RUN CHAIN and PANEL BOARD A21 Sh. 3 of 4	Status: APPROVED	Plant: = Location: + Sublocation: +	
				Document no. 3HAC024480-011	Rev. Ind 18	Page 28 Next 28.1 Total 164
Prepared by, date: A Hägglund	Approved by, date: S Hällgren 2024-03-18					

We reserve all rights in this document and in the information contained therein. Reproduction, use or disclosure to third parties without express authority is strictly forbidden. © Copyright ABB

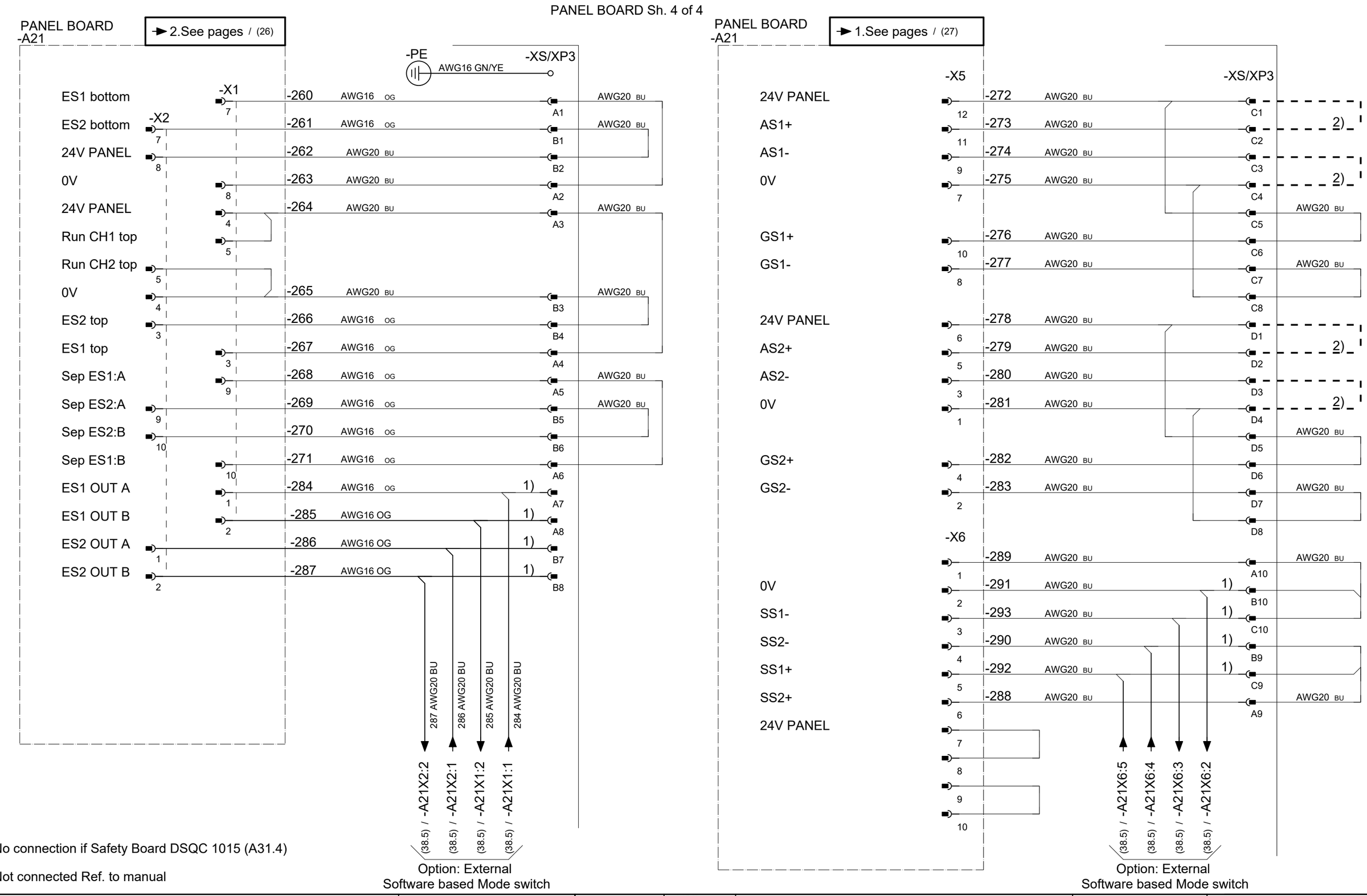

1) No connection if Safety Board DSQC 1015 (A31.4)

2) Not connected Ref. to manual

Latest revision:		Lab/Office: RA/RDP	IRC5 DESIGN Rel: 24:B PANEL BOARD A21 Sh. 4 of 4 Opt:EXT.CUSTOMER. CONNECT. SYSTEM SIGNALS	Status: APPROVED	Plant: = Location: + Sublocation: +
Prepared by, date: A Hägglund	Approved by, date: S Hällgren 2024-03-18			Document no. 3HAC024480-011	Rev. Ind 18
					Page 28.1 Next 28.2 Total 164

We reserve all rights in this document and in the information contained therein. Reproduction, use or disclosure to third parties without express authority is strictly forbidden. © Copyright ABB

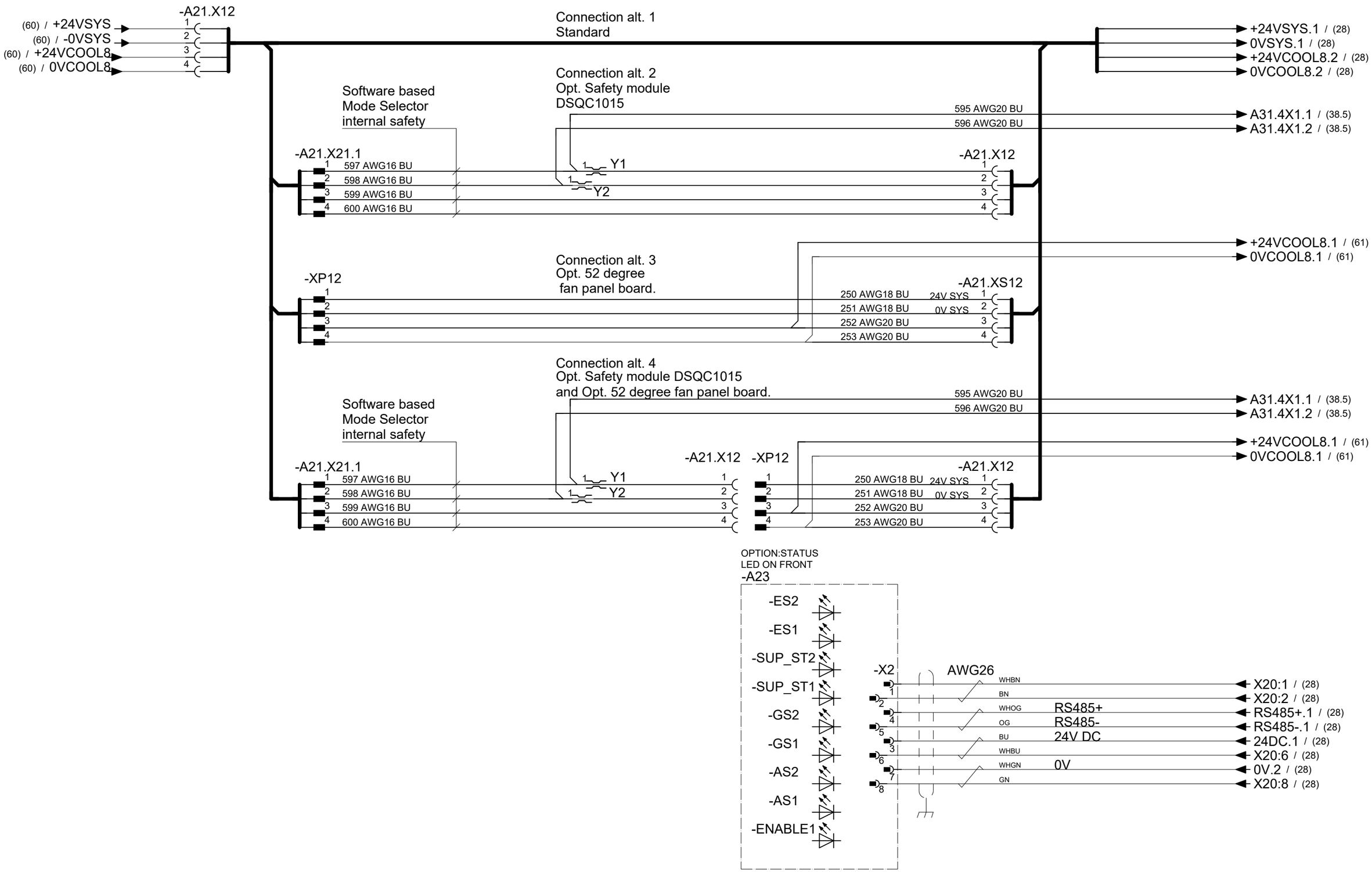

Latest revision:		Lab/Office: RA/RDP	IRC5 DESIGN Rel: 24:B Opt. LED on front; Software based Mode Selector Internal safety harness	Status: APPROVED	Plant: = Location: + Sublocation: +
Prepared by, date: A Hägglund	Approved by, date: S Hällgren 2024-03-18			Document no. 3HAC024480-011	Rev. Ind 18

We reserve all rights in this document and in the information contained therein. Reproduction, use or disclosure to third parties without express authority is strictly forbidden. © Copyright ABB

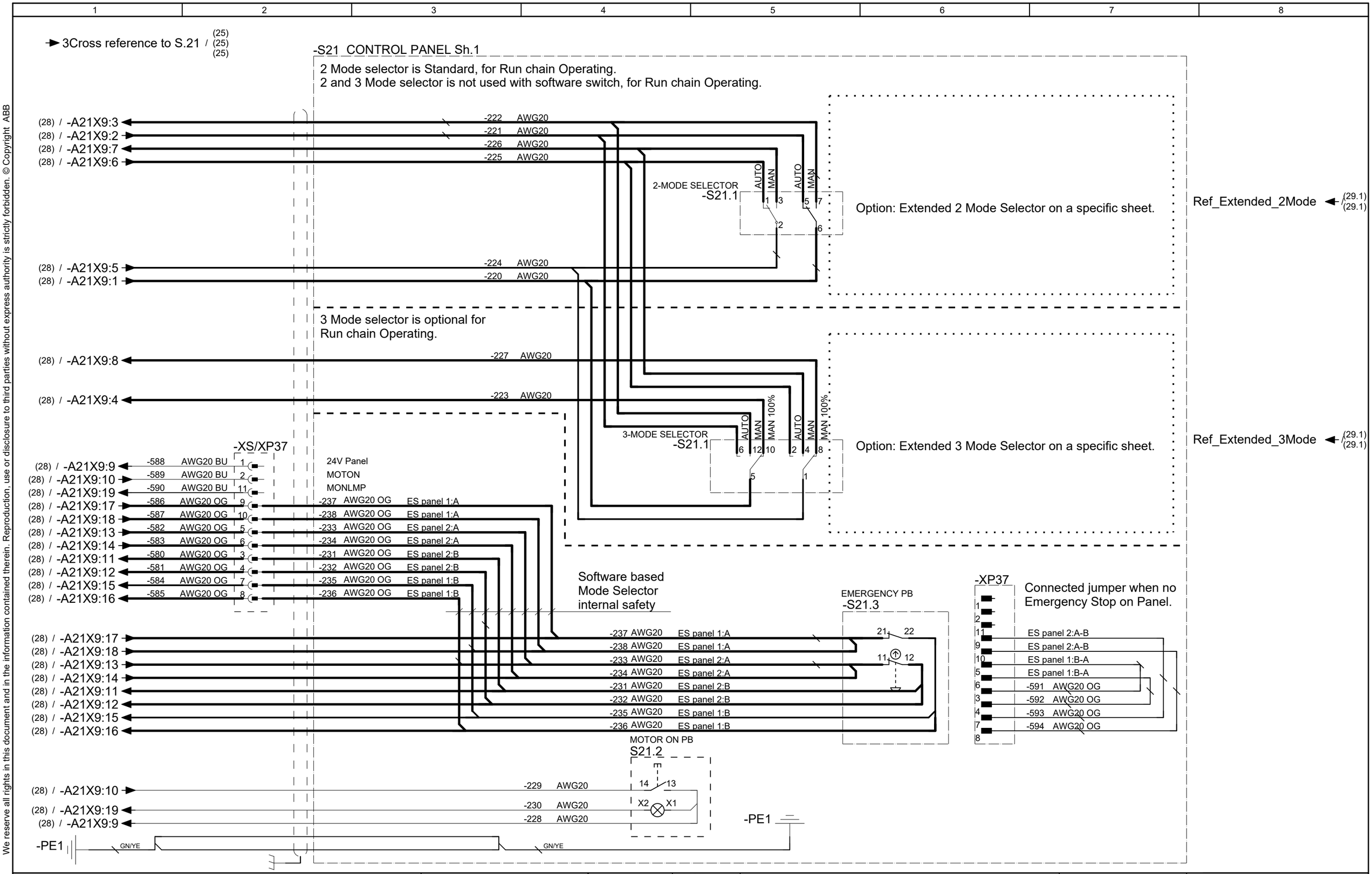

Latest revision:		ABB	Lab/Office: RA/RDP	IRC5 DESIGN Rel: 24:B RUN CHAIN, EM.STOP, Standard 2 MODE SELECTOR option 3 MODE SELECTOR	Status: APPROVED Plant: = Location: + Sublocation: +
Prepared by, date: A Hägglund	Approved by, date: S Hällgren 2024-03-18				Document no. 3HAC024480-011 Rev. Ind 18 Page 29 Next 29.1 Total 164

We reserve all rights in this document and in the information contained therein. Reproduction, use or disclosure to third parties without express authority is strictly forbidden. © Copyright ABB

-S21 CONTROL PANEL Sh.2

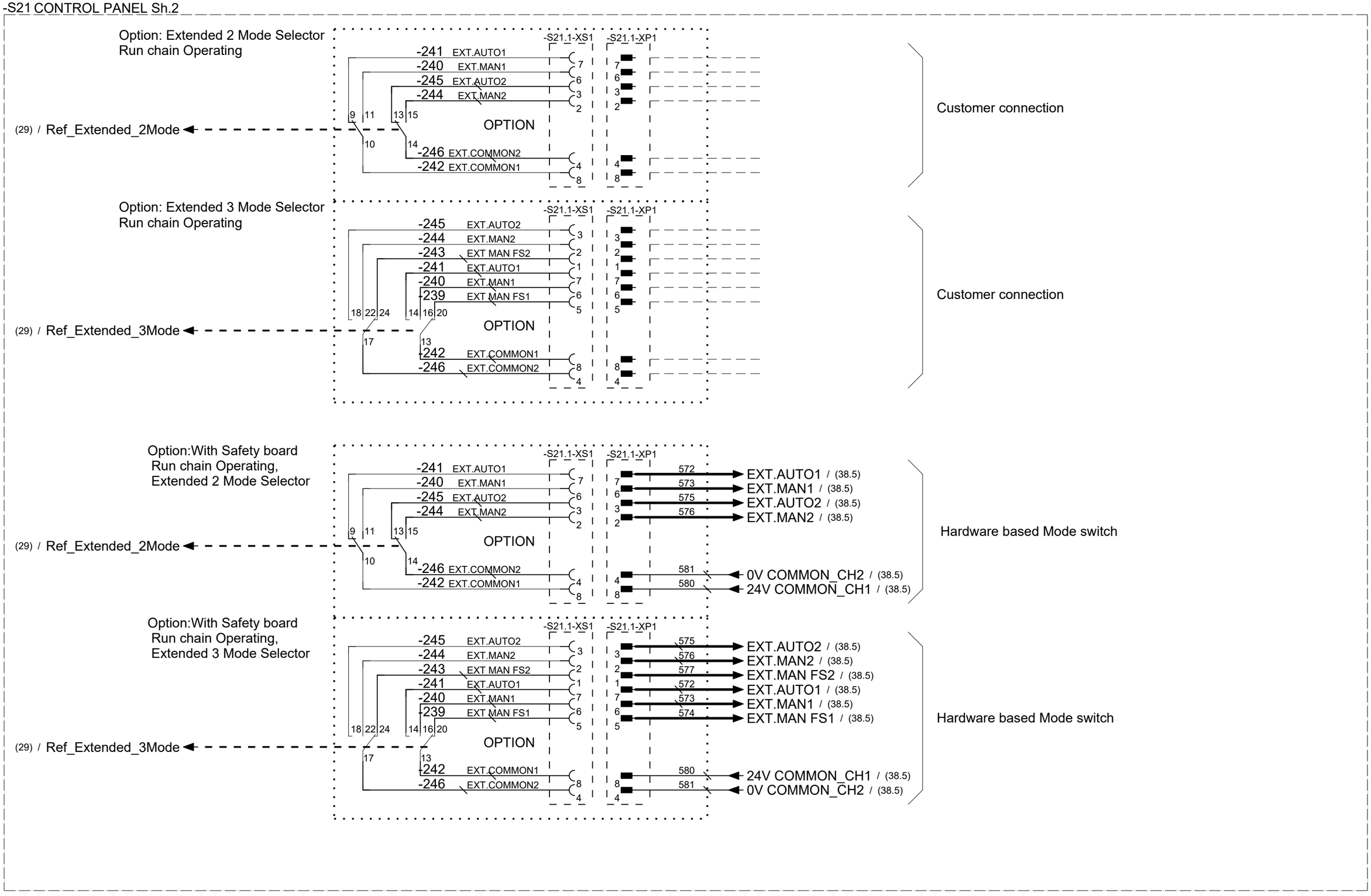

Latest revision:		Lab/Office: RA/RDP	IRC5 DESIGN Rel: 24:B RUN CHAIN S21, 2 & 3 EXTEND MODE SELECTOR, and HARDW. MODE SWITCH with SAFETY BOARD	Status: APPROVED	Plant: = Location: + Sublocation: +
Prepared by, date: A Hägglund	Approved by, date: S Hällgren 2024-03-18			Document no. 3HAC024480-011	Rev. Ind 18

We reserve all rights in this document and in the information contained therein. Reproduction, use or disclosure to third parties without express authority is strictly forbidden. © Copyright ABB

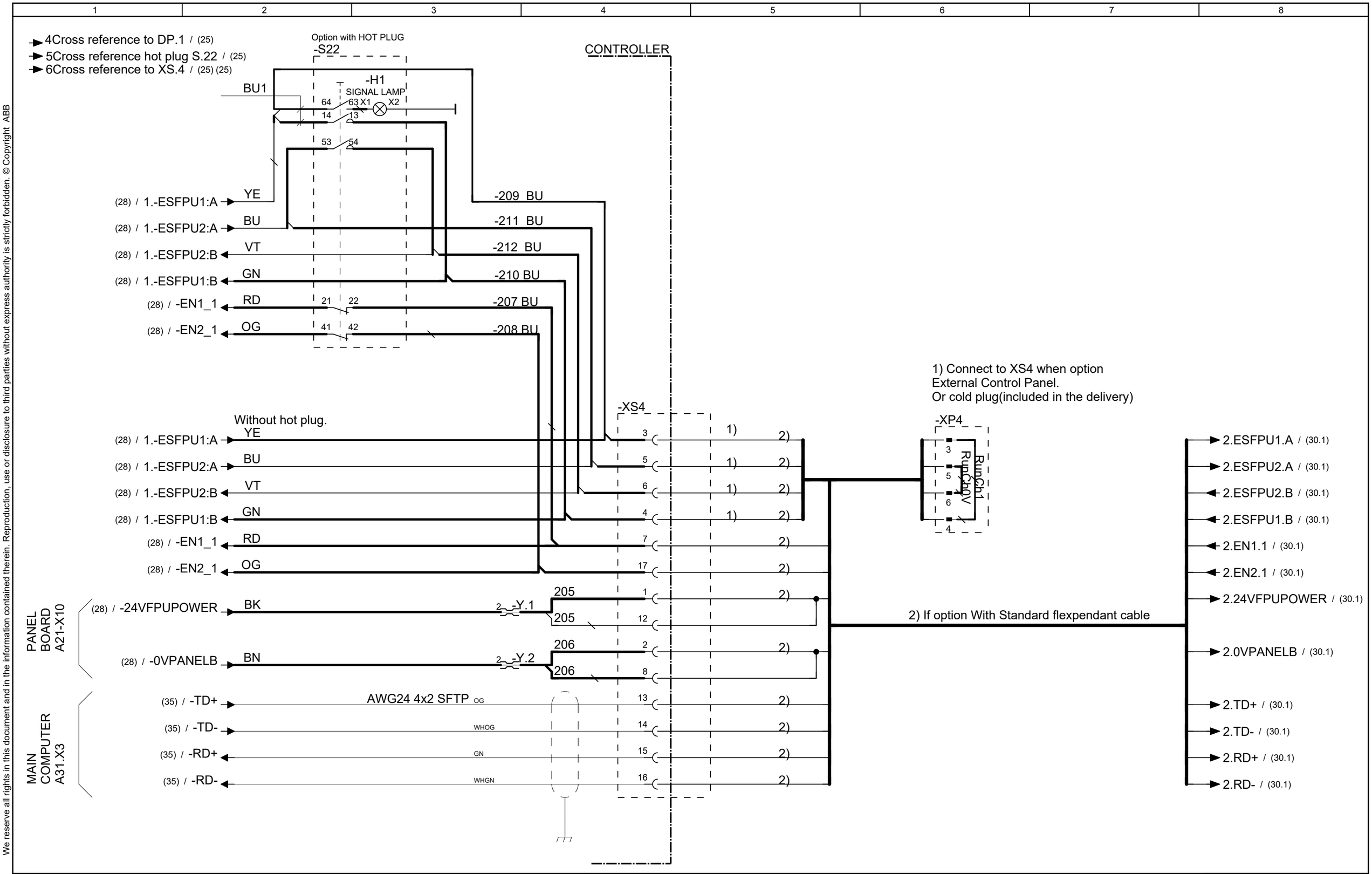

Latest revision:		Lab/Office: RA/RDP	IRC5 DESIGN Rel: 24:B FPU, FLEXPENDANT and option HOT PLUG	Status: APPROVED	Plant: = Location: + Sublocation: +
Prepared by, date: A Hägglund	Approved by, date: S Hällgren 2024-03-18			Document no. 3HAC024480-011	Rev. Ind 18
					Page 30 Next 30.1 Total 164

We reserve all rights in this document and in the information contained therein. Reproduction, use or disclosure to third parties without express authority is strictly forbidden. © Copyright ABB

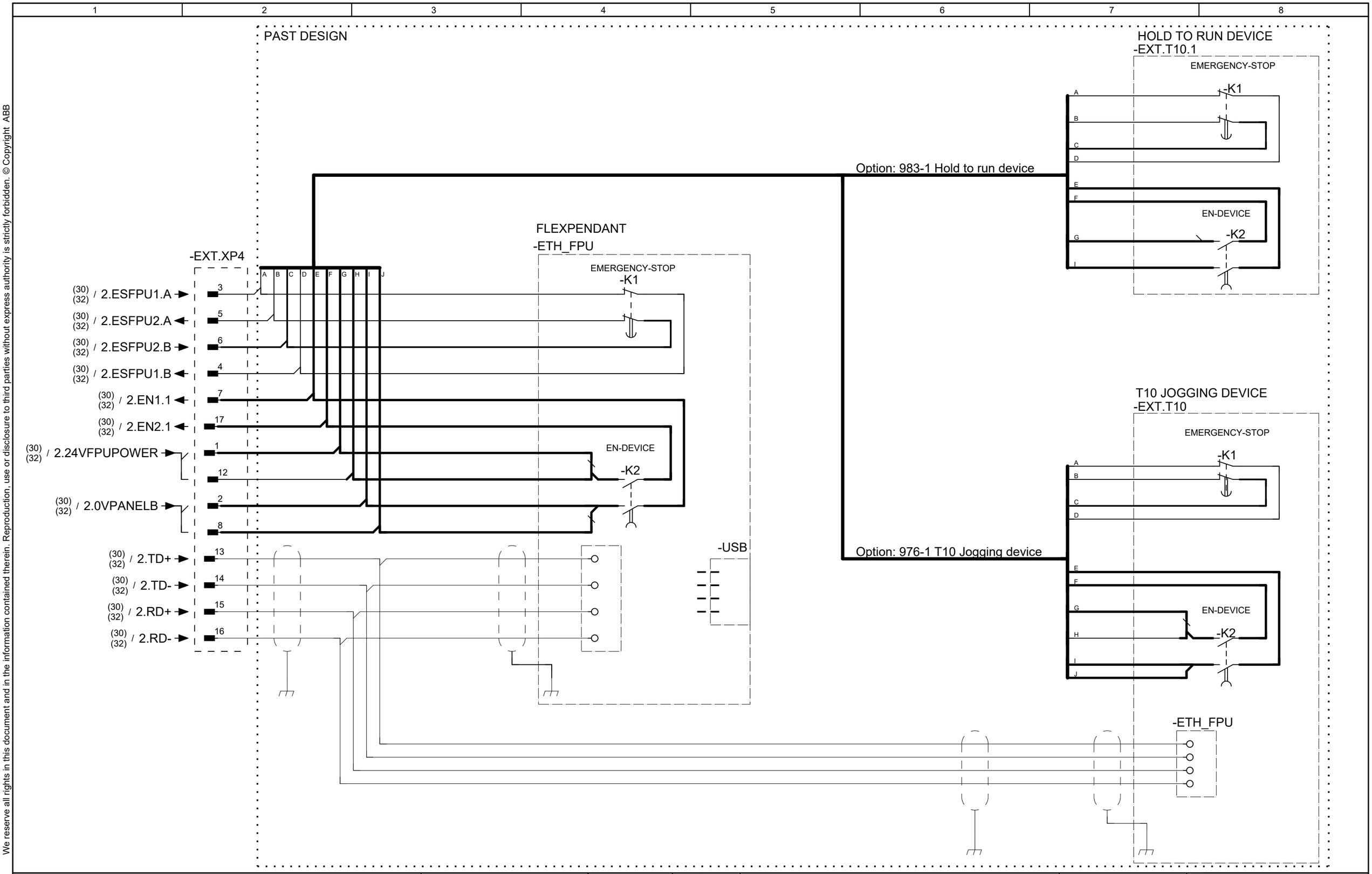

Latest revision:		Lab/Office: RA/RDP	IRC5 DESIGN Rel: 24:B FPU, FLEXPENDANT and Opt. HOLD TO RUN DEVICE T10 JOGGING DEVICE	Status: APPROVED	Plant: = Location: + Sublocation: +
Prepared by, date: A Hägglund	Approved by, date: S Hällgren 2024-03-18			Document no. 3HAC024480-011	Rev. Ind 18
					Page 30.1 Next 30.2 Total 164

We reserve all rights in this document and in the information contained therein. Reproduction, use or disclosure to third parties without express authority is strictly forbidden. © Copyright ABB

Harness: 3HAC055665-002,-003,-004

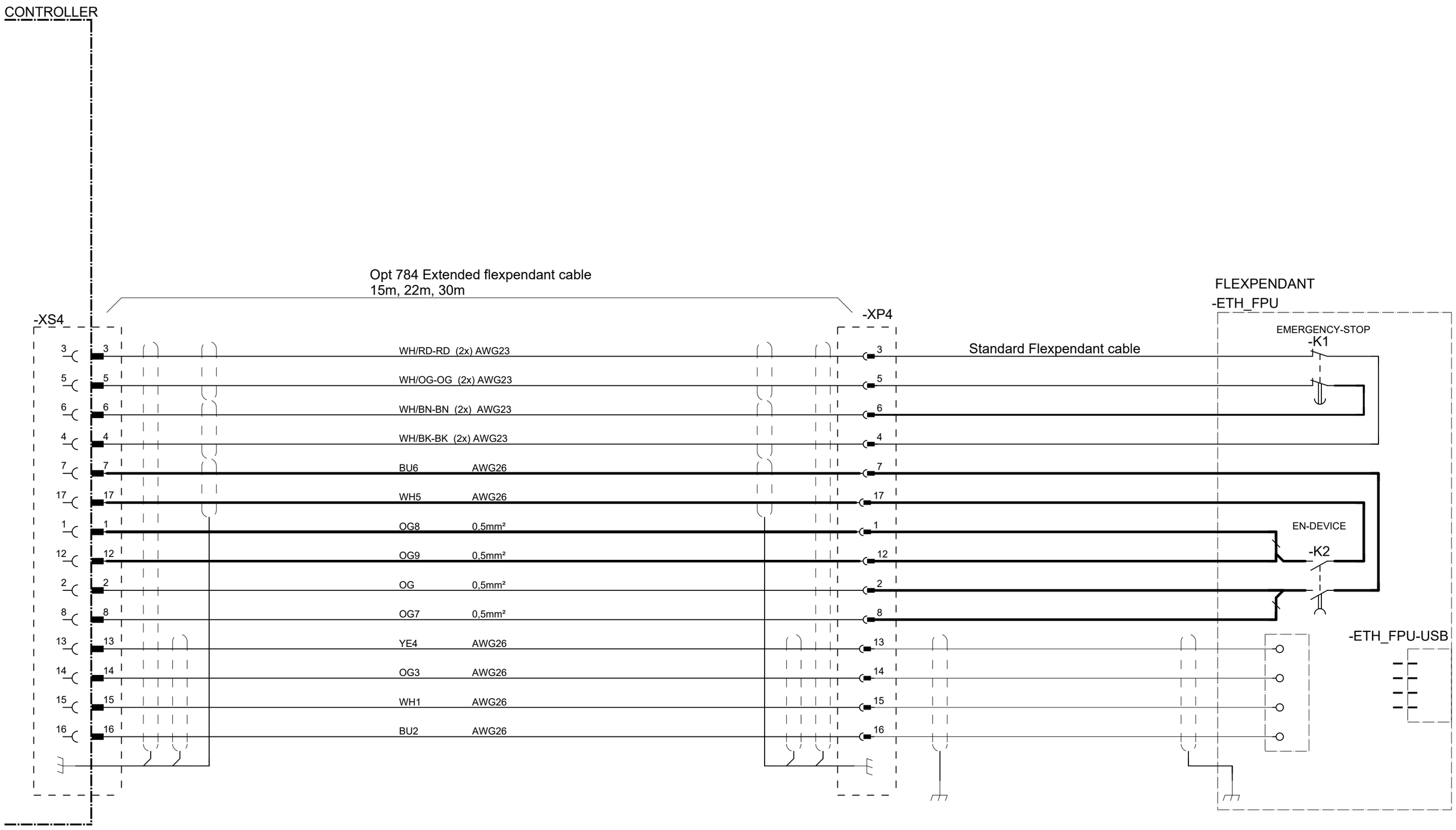

Latest revision:		ABB Lab/Office: RA/RDP	IRC5 DESIGN Rel: 24:B FPU, Extended FLEXPENDANT cable 15 - 30 m	Status: APPROVED	Plant: = Location: + Sublocation: +
				Document no. 3HAC024480-011	Rev. Ind 18
					Page 30.2 Next 31 Total 164
Prepared by, date: A Hägglund	Approved by, date: S Hällgren 2024-03-18				

We reserve all rights in this document and in the information contained therein. Reproduction, use or disclosure to third parties without express authority is strictly forbidden. © Copyright ABB

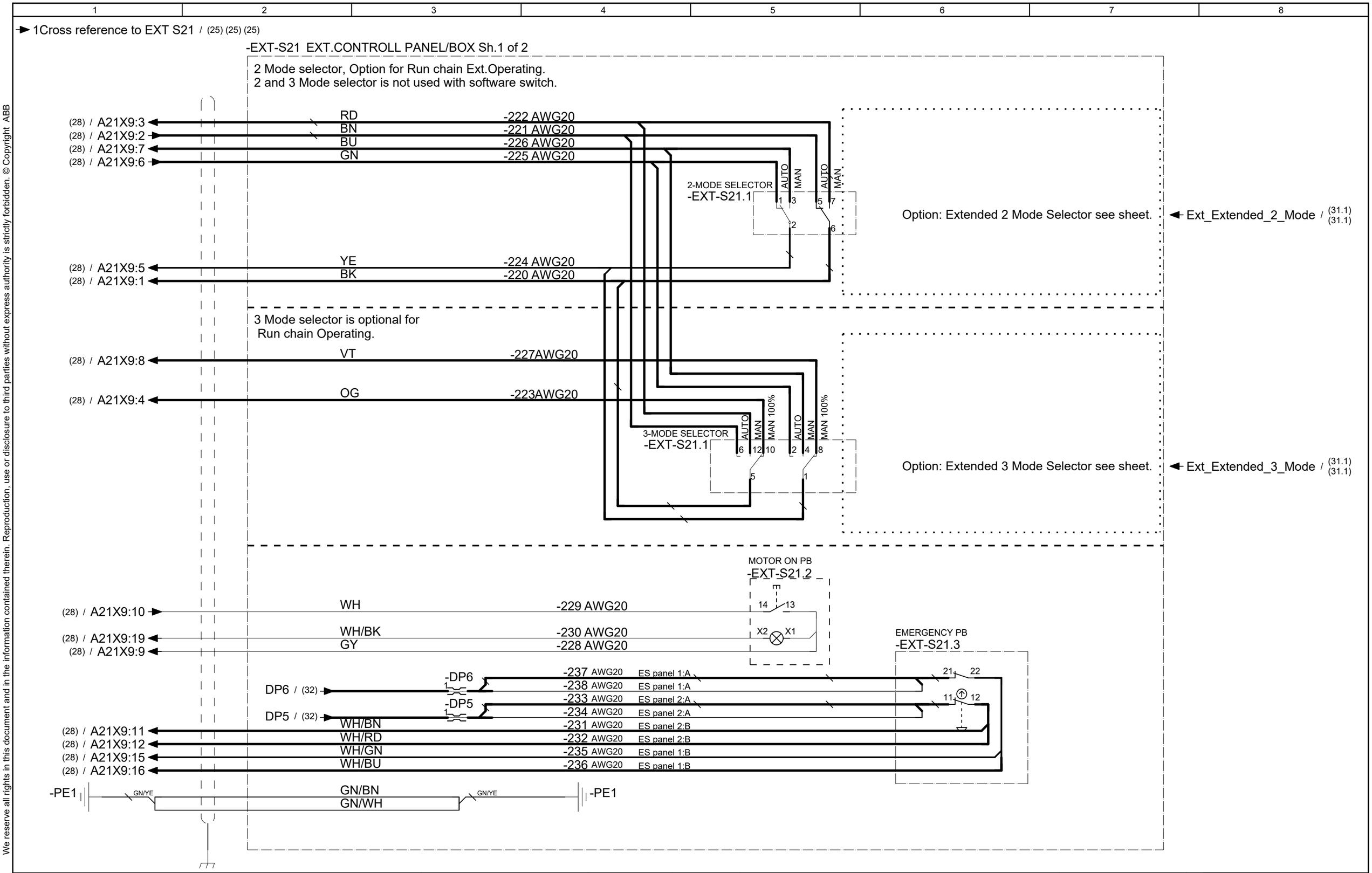

Latest revision:		Lab/Office: RA/RDP	IRC5 DESIGN Rel: 24:B RUN CHAIN A21 EXTERNAL CONTROLL PANEL/BOX , 2 & 3 MODE SELECTOR, EM.STOP	Status: APPROVED	Plant: = Location: + Sublocation: +
Prepared by, date: A Hägglund	Approved by, date: S Hällgren 2024-03-18			Document no. 3HAC024480-011	Rev. Ind 18
					Page 31 Next 31.1 Total 164

We reserve all rights in this document and in the information contained therein. Reproduction, use or disclosure to third parties without express authority is strictly forbidden. © Copyright ABB

-EXT-S21 EXTERNAL CONTROL PANEL/BOX Sh.2

Option: Extended 2 Mode Selector
Run chain Operating

(31) / Ext_Extended_2_Mode

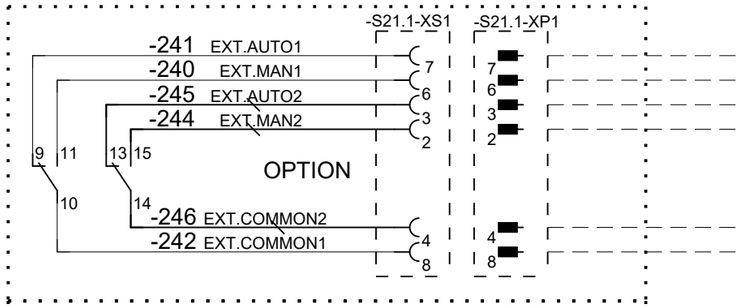

Customer connection

Option: Extended 3 Mode Selector
Run chain Operating

(31) / Ext_Extended_3_Mode

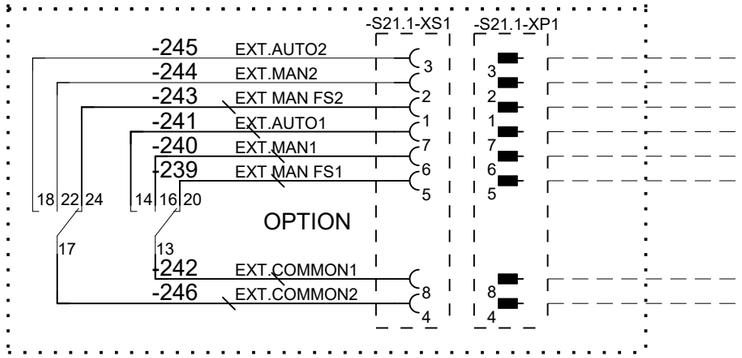

Customer connection

Option:With Safety board
Run chain Operating,
Extended 2 Mode Selector

(31) / Ext_Extended_2_Mode

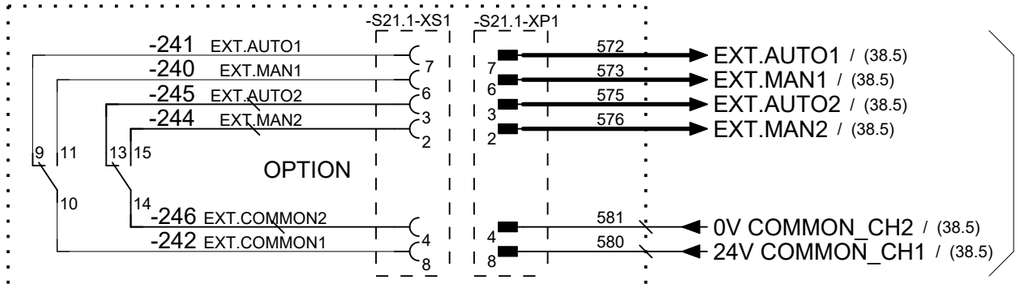

Hardware based Mode switch

Option:With Safety board
Run chain Operating,
Extended 3 Mode Selector

(31) / Ext_Extended_3_Mode

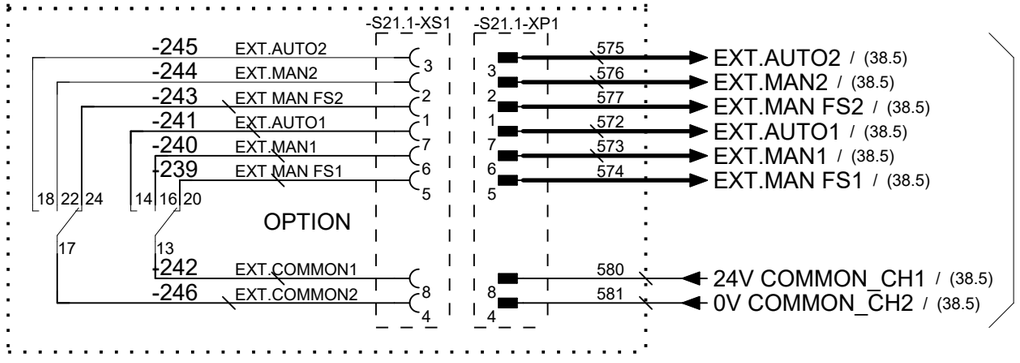

Hardware based Mode switch

Latest revision:		Lab/Office: RA/RDP	IRC5 DESIGN Rel: 24:B EXTERNAL CONTROLL PANEL/BOX RUN CHAIN EXT.S21, 2 & 3 MODE SELECTOR	Status: APPROVED	Plant: = Location: + Sublocation: +
Prepared by, date: A Hägglund	Approved by, date: S Hällgren 2024-03-18			Document no. 3HAC024480-011	Rev. Ind 18

We reserve all rights in this document and in the information contained therein. Reproduction, use or disclosure to third parties without express authority is strictly forbidden. © Copyright ABB

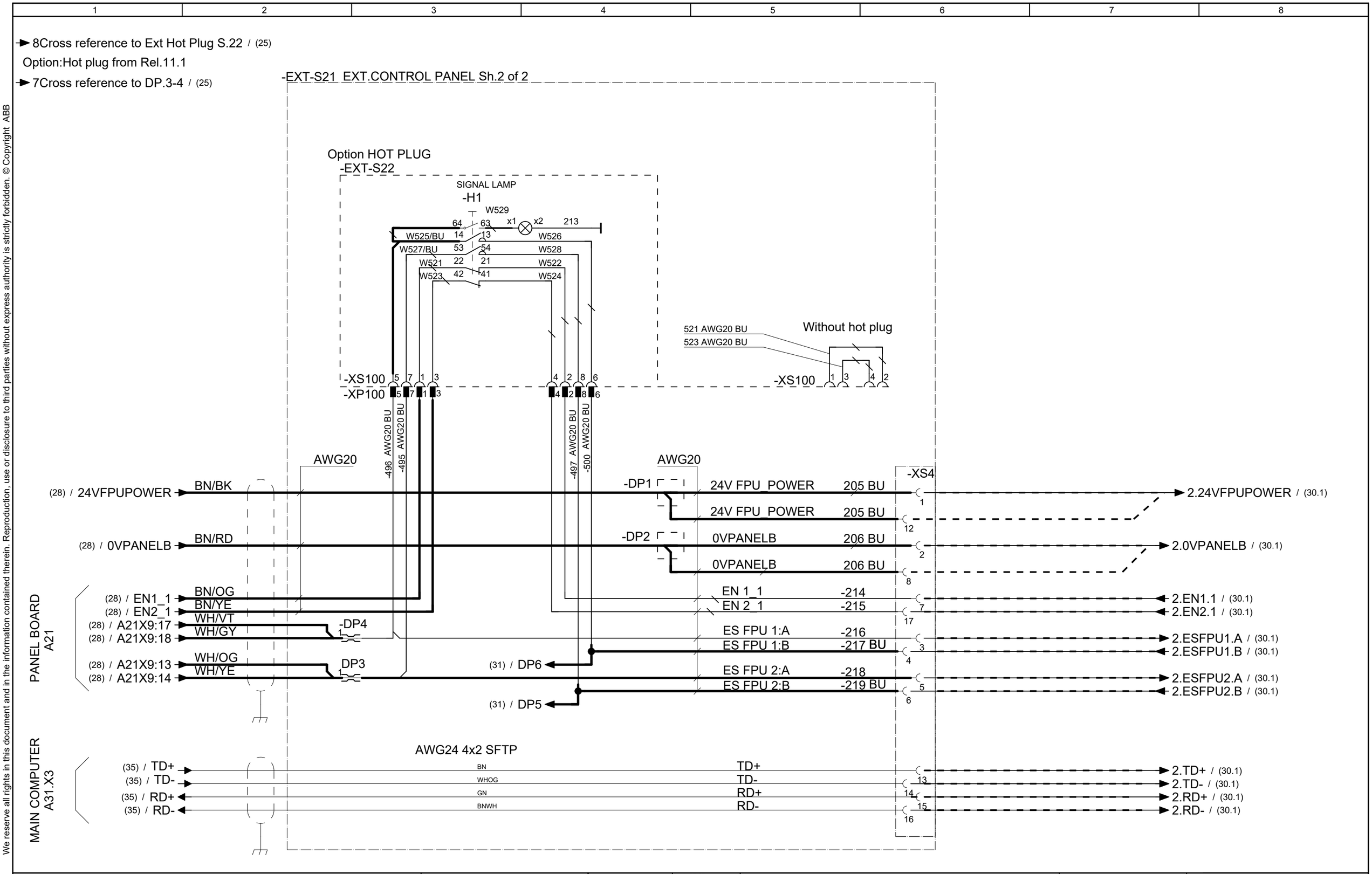

Latest revision:		Lab/Office: RA/RDP	IRC5 DESIGN Rel: 24:B RUN CHAIN EXT A21 OPERATING WITH OPT: HOT PLUG rel 11.1	Status: APPROVED	Plant: = Location: + Sublocation: +
Prepared by, date: A Hägglund	Approved by, date: S Hällgren 2024-03-18			Document no. 3HAC024480-011	Rev. Ind 18

A31 Main Computer Unit DSQC1000 Rel. 15.2 and earlier
Main Computer Unit DSQC1018 Rel. 16.1
Main Computer Unit DSQC1024 Rel. 20.A

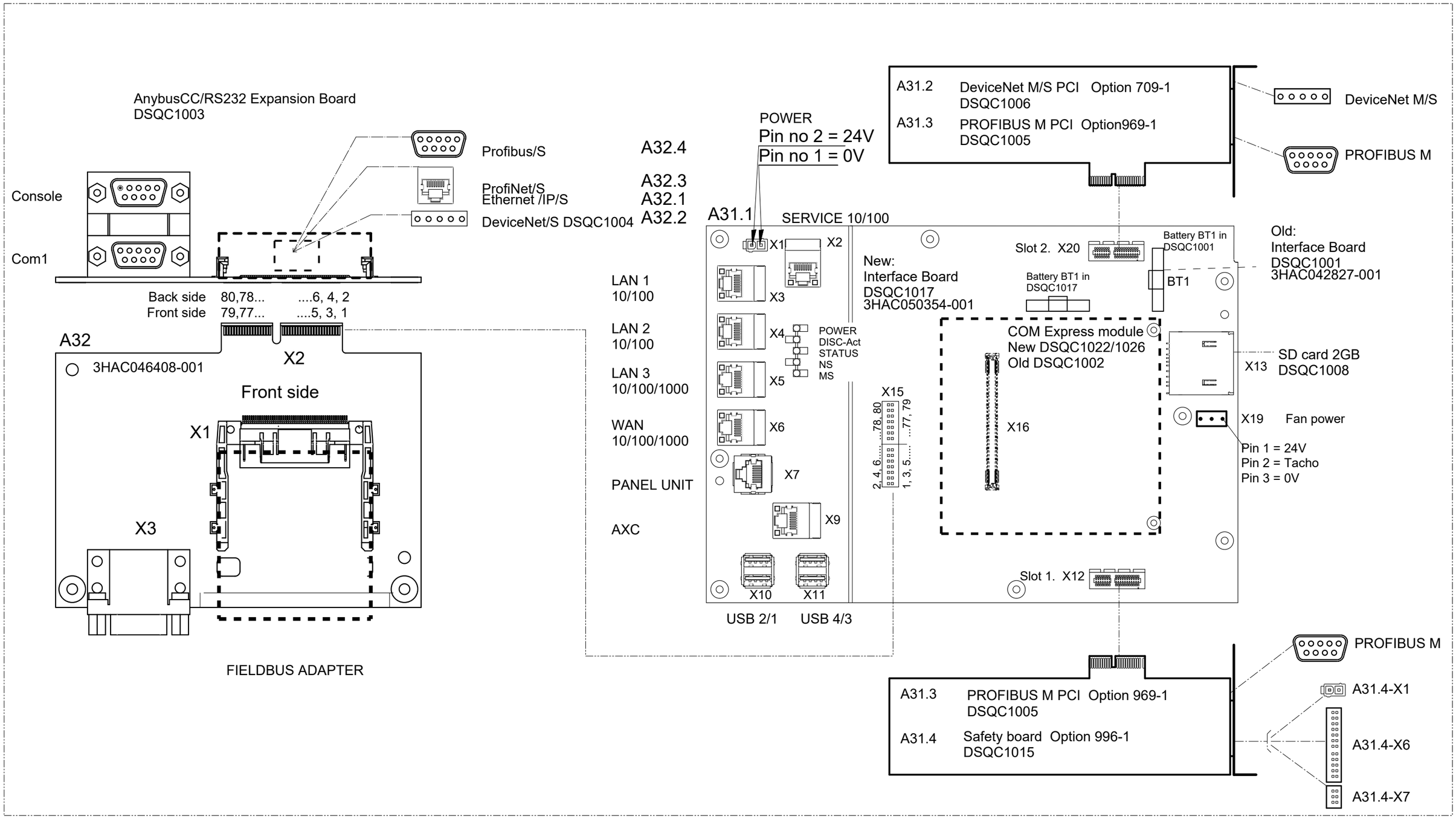

We reserve all rights in this document and in the information contained therein. Reproduction, use or disclosure to third parties without express authority is strictly forbidden. © Copyright ABB

Latest revision:		Lab/Office: RA/RDP	IRC5 DESIGN Rel: 24:B MAIN COMPUTER/ANYBUS_CC/RS232 EXP. /INTERFACE BOARD/	Status: APPROVED	Plant: = Location: + Sublocation: +
Prepared by, date: A Hägglund	Approved by, date: S Hällgren 2024-03-18			Document no. 3HAC024480-011	Rev. Ind 18

We reserve all rights in this document and in the information contained therein. Reproduction, use or disclosure to third parties without express authority is strictly forbidden. © Copyright ABB

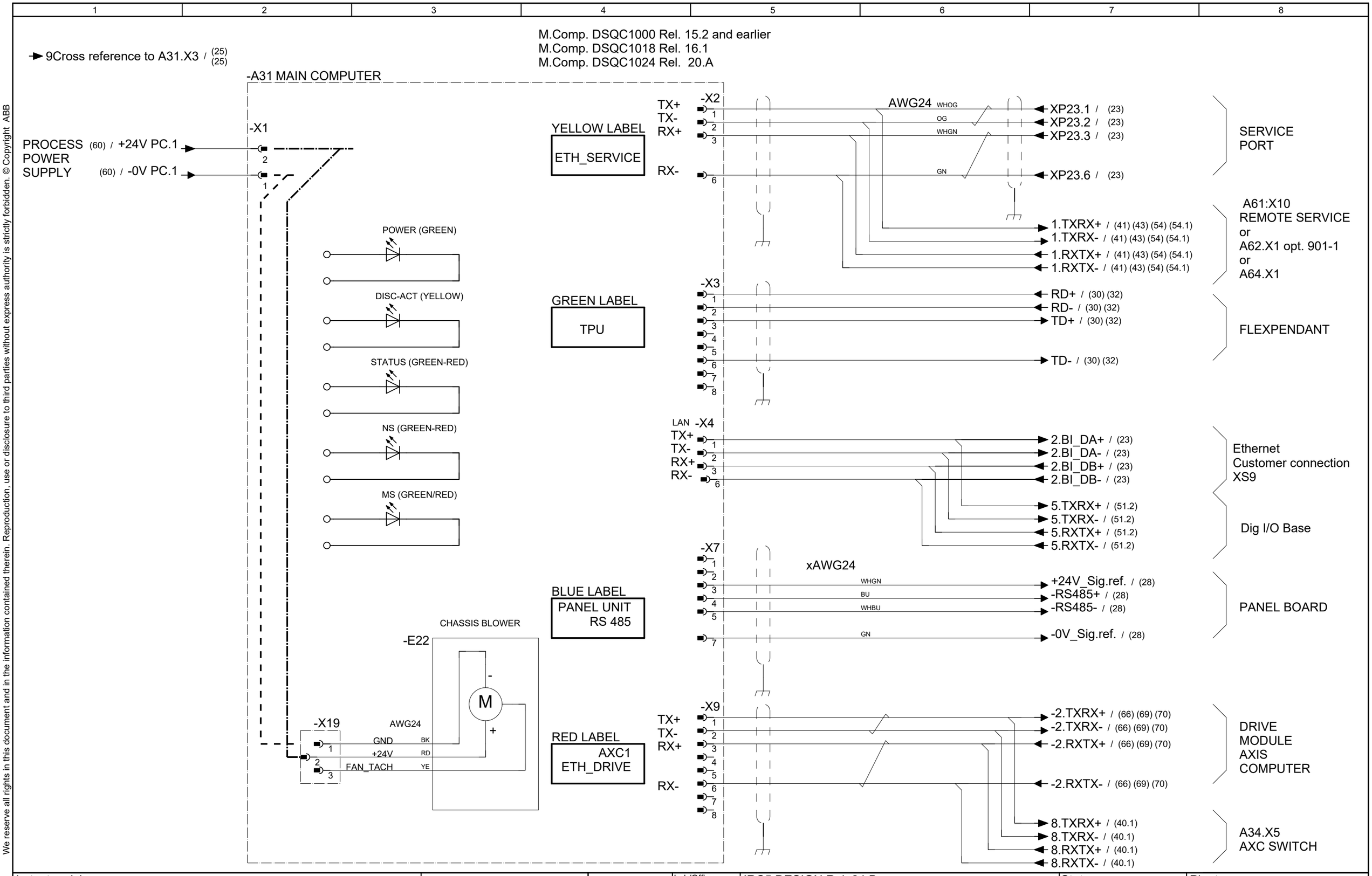

Latest revision:		Lab/Office: RA/RDP	IRC5 DESIGN Rel: 24:B MAIN COMPUTER A31 DSQC1000/1018	Status: APPROVED	Plant: = Location: + Sublocation: +
Prepared by, date: A Hägglund	Approved by, date: S Hällgren 2024-03-18			Document no. 3HAC024480-011	Rev. Ind 18

We reserve all rights in this document and in the information contained therein. Reproduction, use or disclosure to third parties without express authority is strictly forbidden. © Copyright ABB

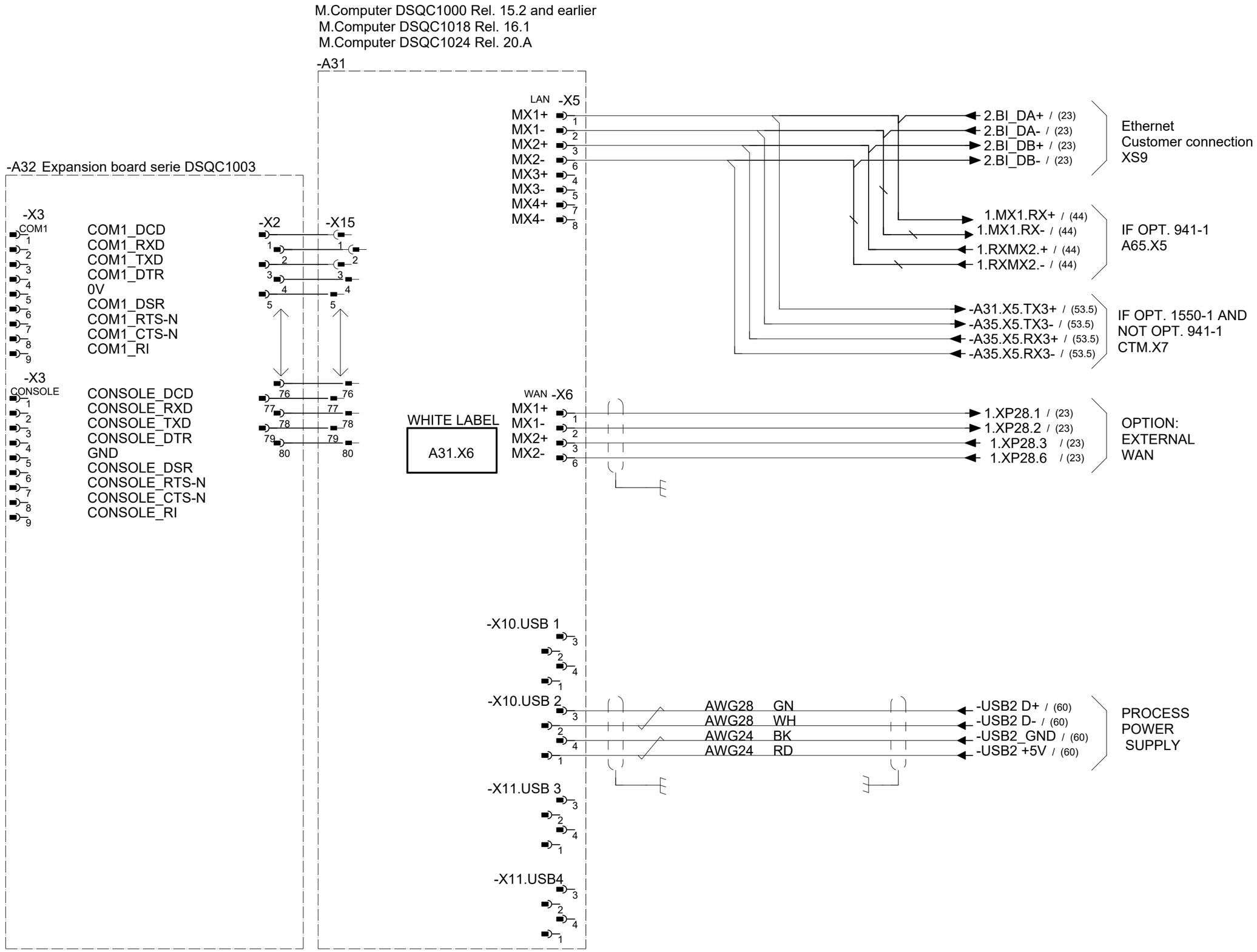

Latest revision:		Lab/Office: RA/RDP	IRC5 DESIGN Rel: 24:B MAIN COMPUTER A31 DSQC1000/1018 ; A32 DSQC1003	Status: APPROVED	Plant: = Location: + Sublocation: +
Prepared by, date: A Hägglund	Approved by, date: S Hällgren 2024-03-18			Document no. 3HAC024480-011	Rev. Ind 18

We reserve all rights in this document and in the information contained therein. Reproduction, use or disclosure to third parties without express authority is strictly forbidden. © Copyright ABB

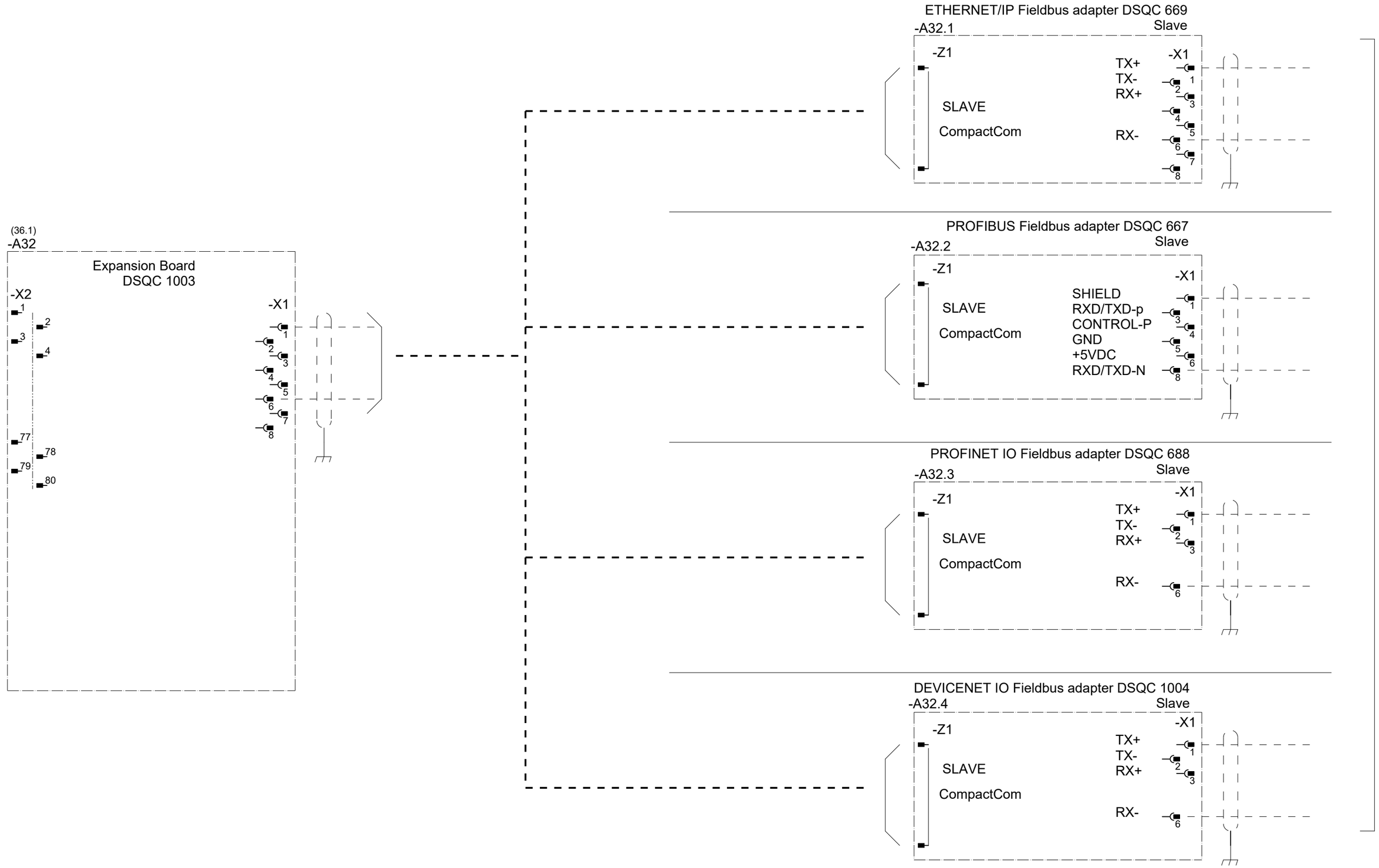

Latest revision:		Lab/Office: RA/RDP	IRC5 DESIGN Rel: 24:B FIELDBUS ADAPTER A32: ETHERNET/IP, PROFIBUS and PROFINET IO	Status: APPROVED	Plant: = Location: + Sublocation: +
Prepared by, date: A Hägglund	Approved by, date: S Hällgren 2024-03-18			Document no. 3HAC024480-011	Rev. Ind 18

We reserve all rights in this document and in the information contained therein. Reproduction, use or disclosure to third parties without express authority is strictly forbidden. © Copyright ABB

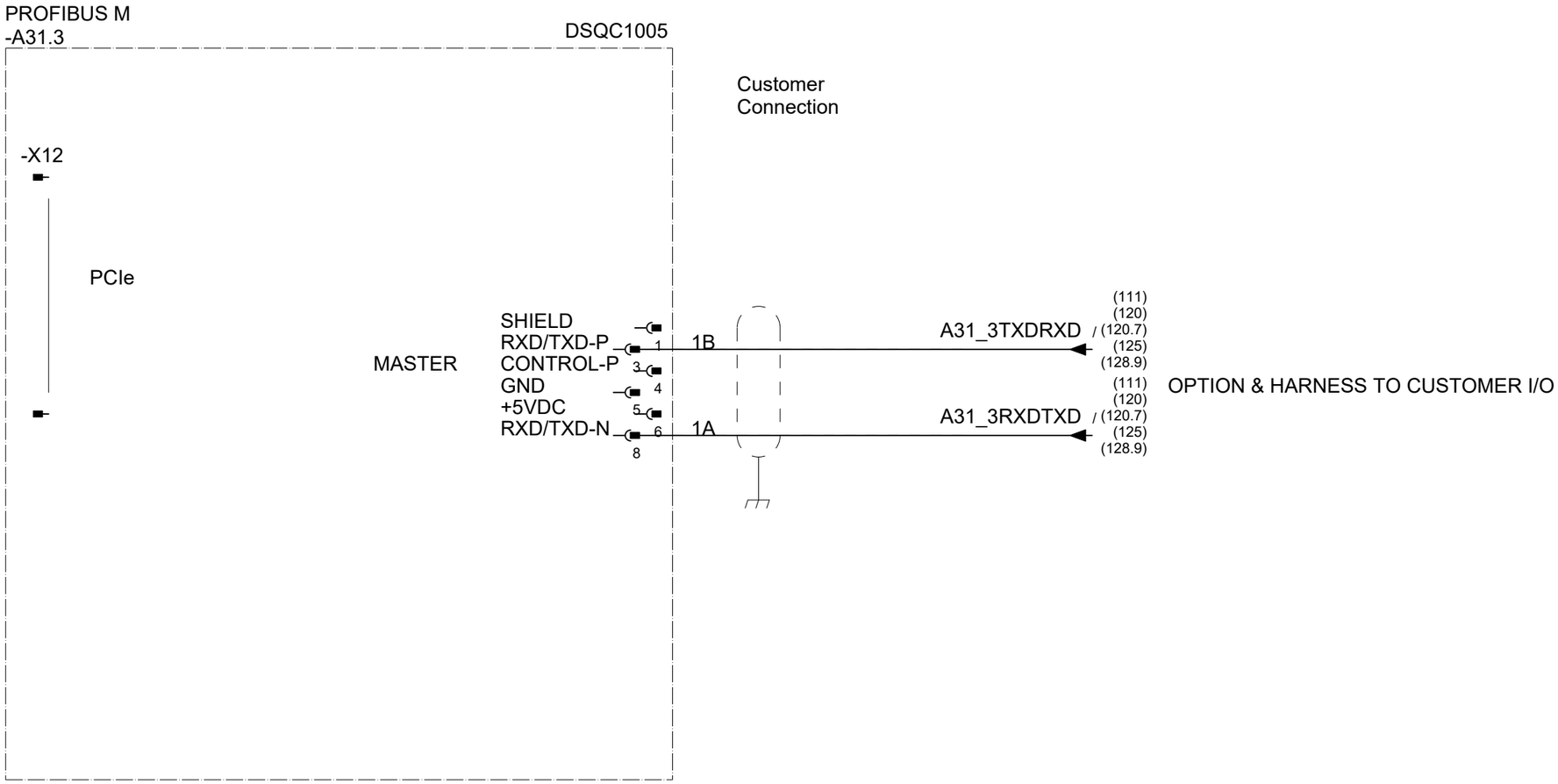

Latest revision:		ABB	Lab/Office: RA/RDP	IRC5 DESIGN Rel: 24:B PROFIBUS DP M/S A31.3	Status: APPROVED	Plant: = Location: + Sublocation: +
Prepared by, date: A Hägglund	Approved by, date: S Hällgren 2024-03-18				Document no. 3HAC024480-011	Rev. Ind 18

We reserve all rights in this document and in the information contained therein. Reproduction, use or disclosure to third parties without express authority is strictly forbidden. © Copyright ABB

Options:
996-1 Safety Module. ———
AND
735-1 Add. Contacts, 3 modes OR - - - - - -
735-2 Add. Contacts, 2 modes
AND
731-1 Safety internal connection. —·—·—·—

Internal-Hardware Safety switch conn.

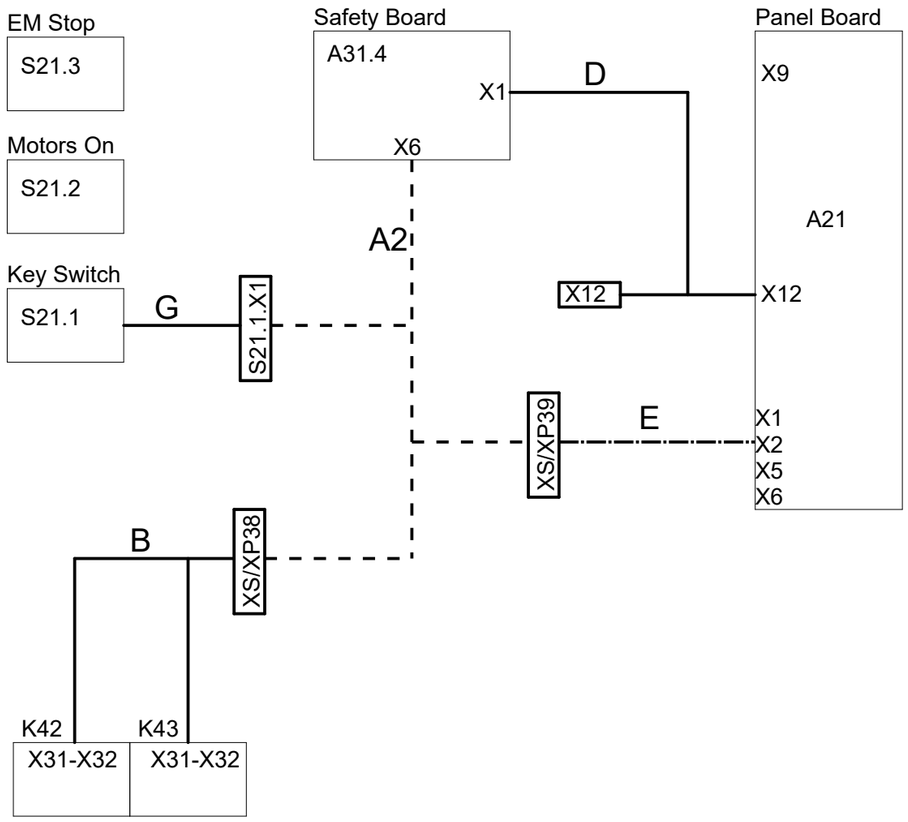

Options:
996-1 Safety Module. ———
AND
735-1 Add. Contacts, 3 modes OR - - - - - -
735-2 Add. Contacts, 2 modes
AND
731-2 Safety external connection. —·—·—·—

External-Hardware Safety switch conn.

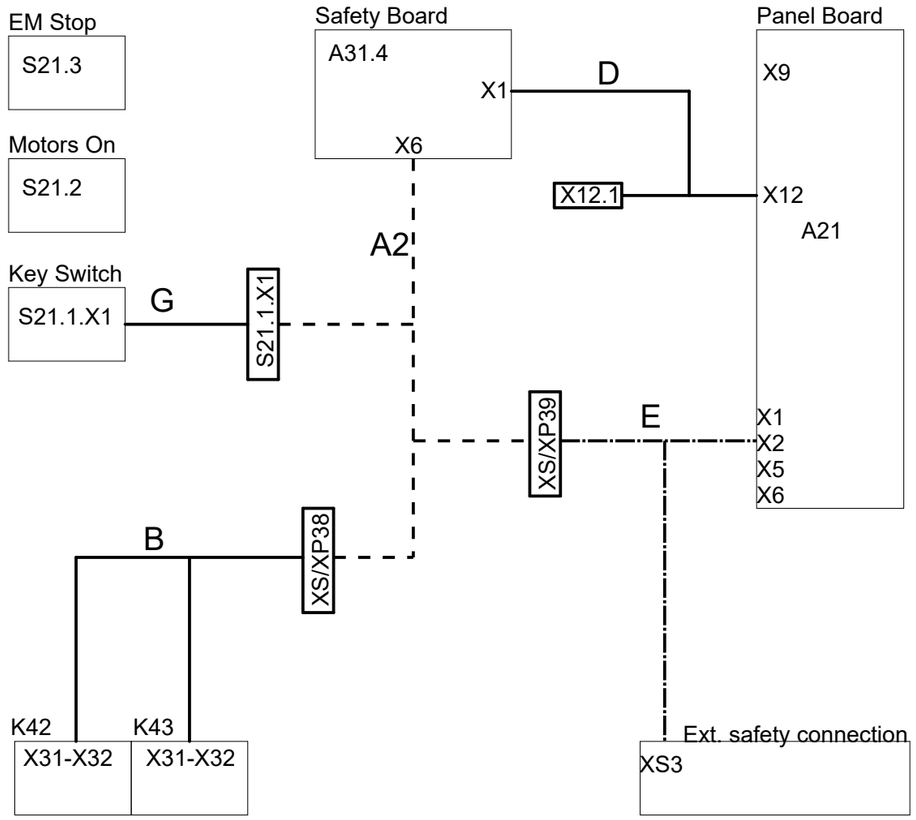

A = Re-designed Safety harness for Key-less	3HAC056648-001
A2 = Safety harness for hard Key switch	3HAC057150-001
B = Main Contactor supervision harness.	3HAC055642-001
C= Emergency Stop harness.	3HAC056527-001
D= +24V and 0V supply.	3HAC055633-001
E = Internal Safety Conn. harness. New design.	3HAC056638-001
F = External Safety Conn. New design.	3HAC056622-001
G = Extended Key switch harness.	3HAC023476-001

We reserve all rights in this document and in the information contained therein. Reproduction, use or disclosure to third parties without express authority is strictly forbidden. © Copyright ABB

Options:
With harness connection
996-1 Safety Module
AND
735-7 Keyless Selector 3 modes OR
735-8 Keyless Selector 2 modes
AND
731-1 Safety internal connection.

Software Internal Safety connection

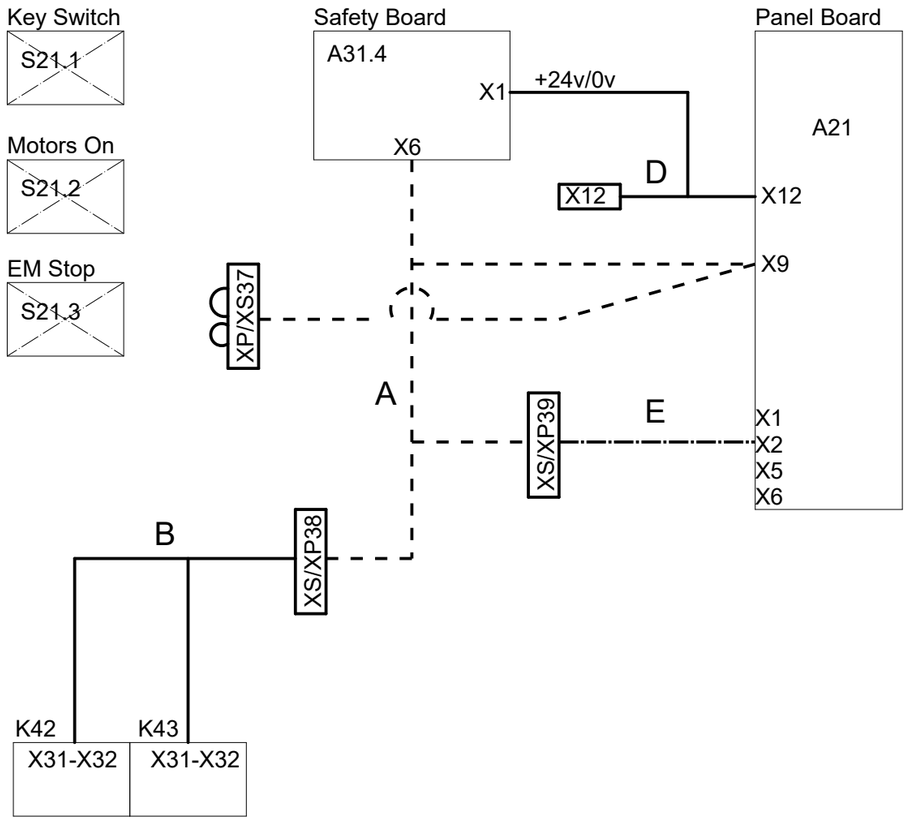

Options:
With harness connection
996-1 Safety Module
AND
735-7 Keyless Selector 3 modes OR
735-8 Keyless Selector 2 modes
AND
731-2 Safety External connection.

Software External Safety connection

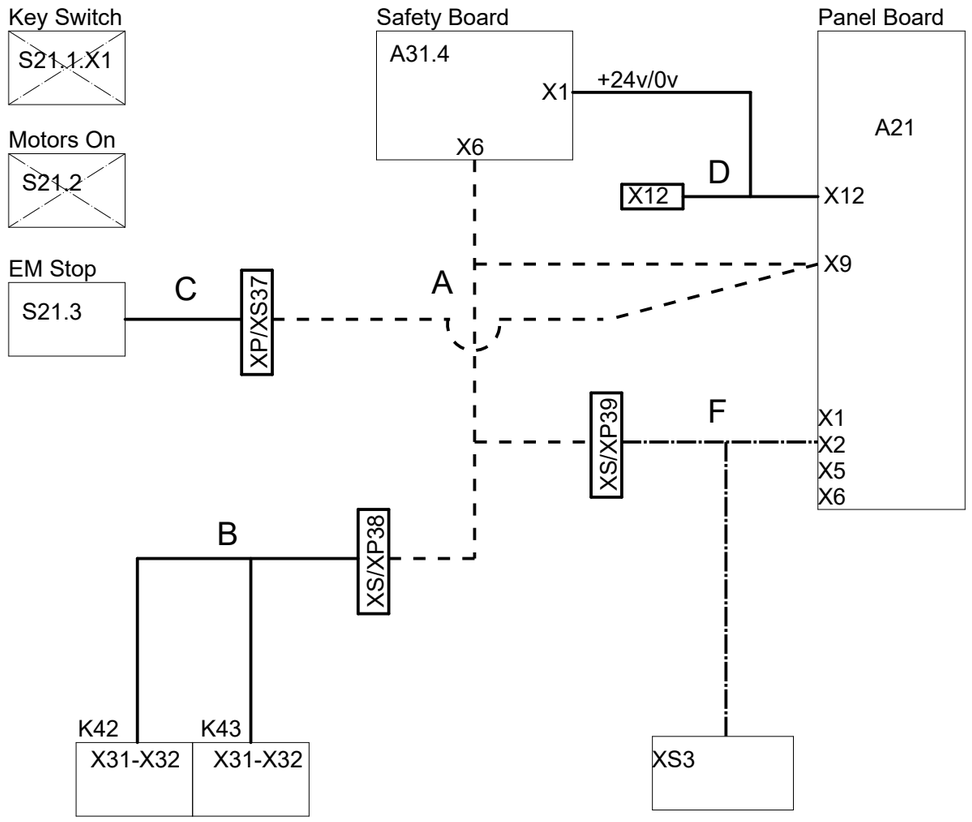

A = Re-designed Safety harness for Key-less	3HAC056648-001
B = Main Contactor supervision harness.	3HAC055642-001
C = Emergency Stop harness.	3HAC056527-001
D= +24V and 0V supply harness.	3HAC055633-001
E = Internal Safety Conn. New design.	3HAC056638-001
F = External Safety Conn. New design.	3HAC056622-001

We reserve all rights in this document and in the information contained therein. Reproduction, use or disclosure to third parties without express authority is strictly forbidden. © Copyright ABB

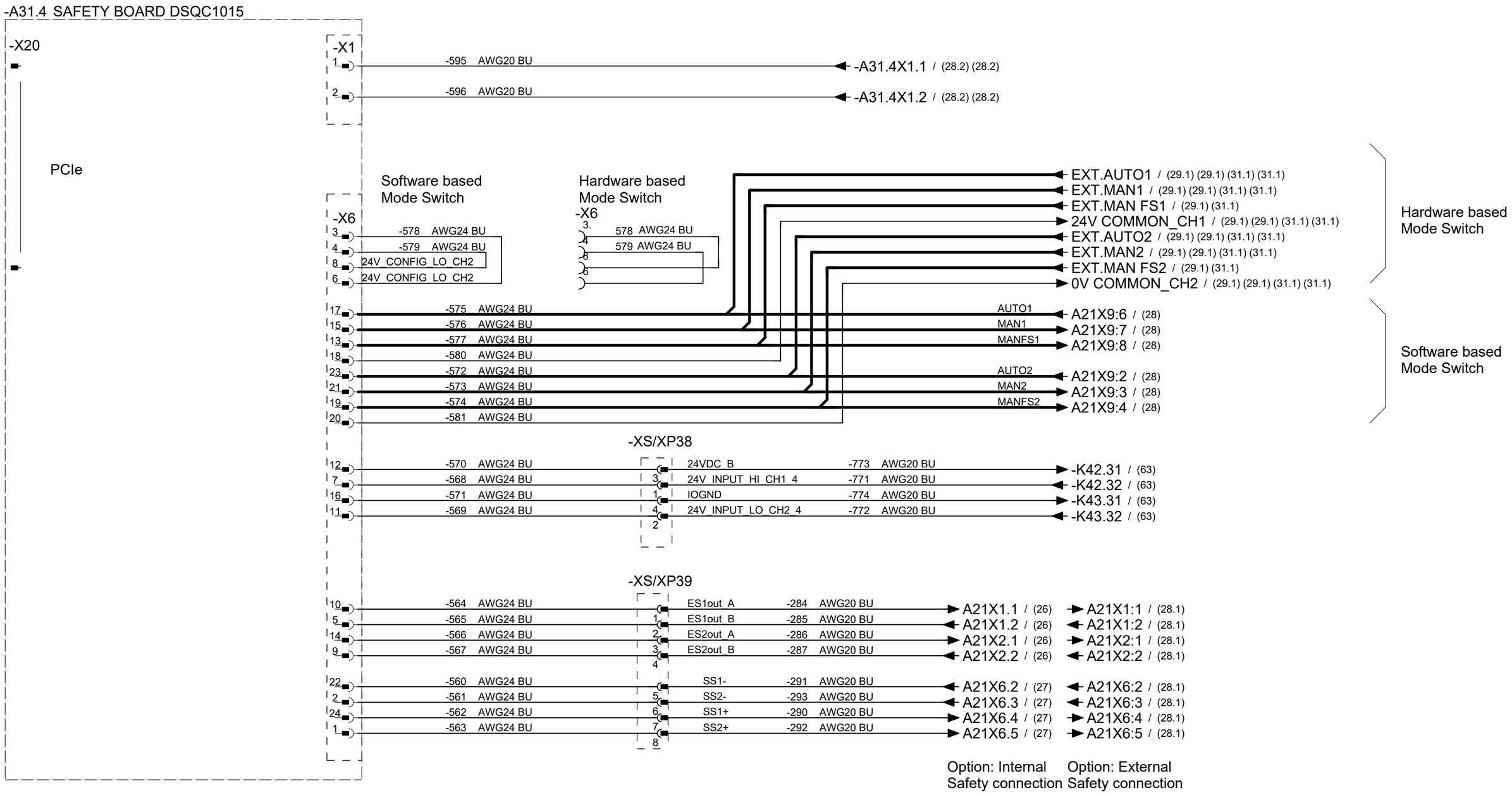

Latest revision:		Lab/Office: RA/RDP	IRC5 DESIGN Rel: 24:B SAFETY BOARD A31.4 DSQC1015 Hardware and Software based Mode Switch	Status: APPROVED	Plant: = Location: + Sublocation: +
Prepared by, date: A Hägglund	Approved by, date: S Hällgren 2024-03-18			Document no. 3HAC024480-011	Rev. Ind 18

We reserve all rights in this document and in the information contained therein. Reproduction, use or disclosure to third parties without express authority is strictly forbidden. © Copyright ABB

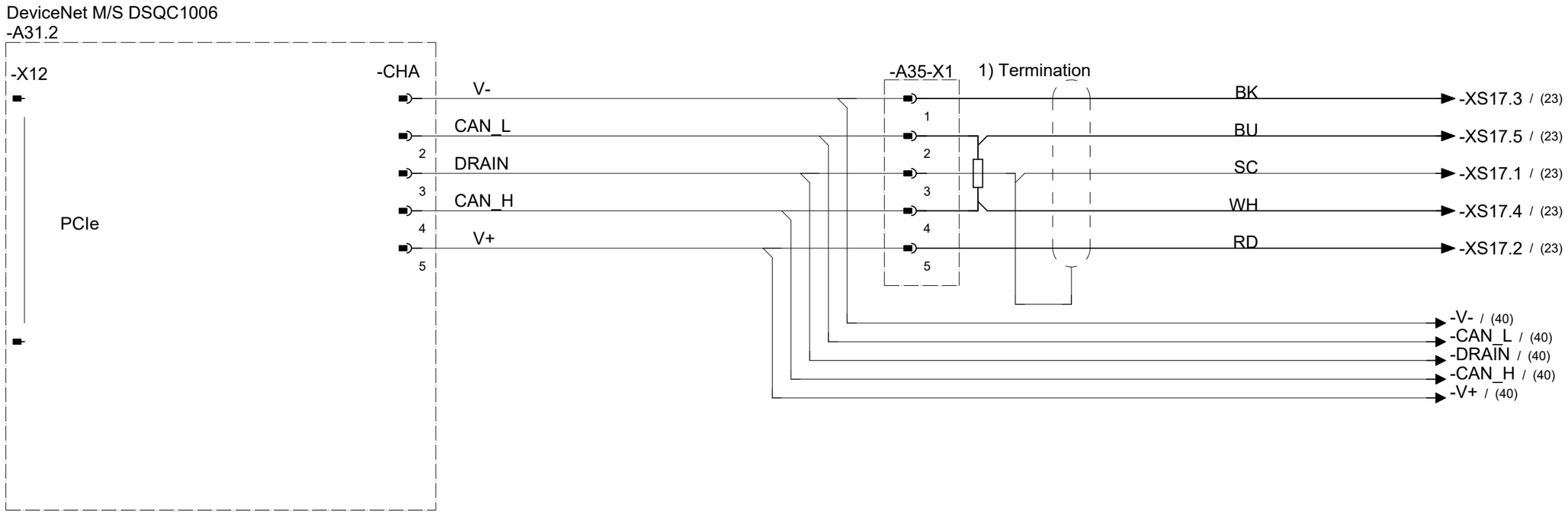

OPTION

1) Termination resistor when the optional harness is not connected.

Latest revision:		Lab/Office: RA/RDP	IRC5 DESIGN Rel: 24:B DEVICENET A31.2 m/s DSQC1006	Status: APPROVED	Plant: = Location: + Sublocation: +	
Prepared by, date: A Hägglund	Approved by, date: S Hällgren 2024-03-18			Document no. 3HAC024480-011	Rev. Ind 18	Page 39 Next 40 Total 164

We reserve all rights in this document and in the information contained therein. Reproduction, use or disclosure to third parties without express authority is strictly forbidden. © Copyright ABB

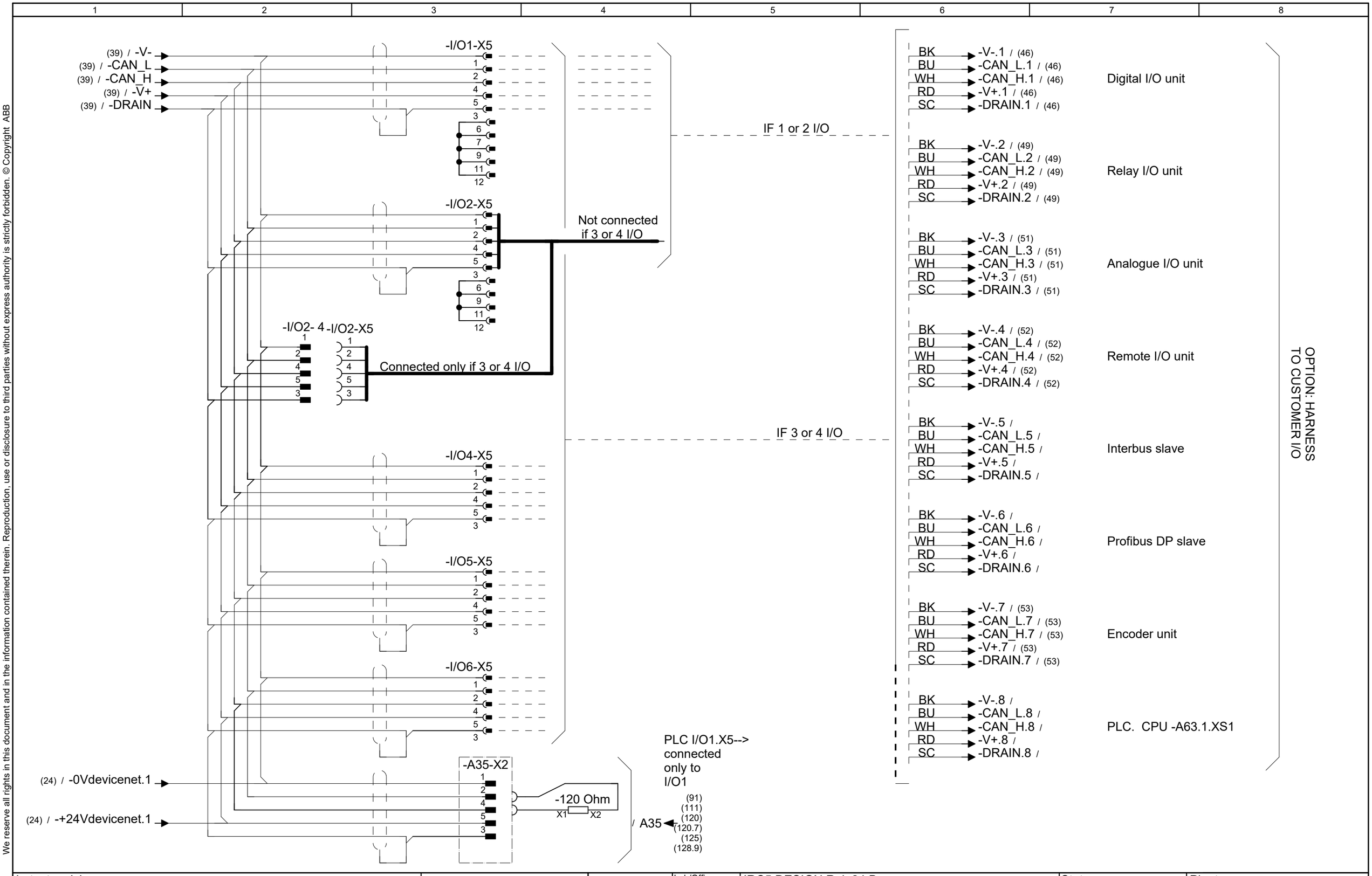

Latest revision:		Lab/Office: RA/RDP	IRC5 DESIGN Rel: 24:B DEVICENET ADAPTER	Status: APPROVED	Plant: = Location: + Sublocation: +
Prepared by, date: A Hägglund	Approved by, date: S Hällgren 2024-03-18			Document no. 3HAC024480-011	Rev. Ind 18

Page 40
Next 40.1
Total 164

We reserve all rights in this document and in the information contained therein. Reproduction, use or disclosure to third parties without express authority is strictly forbidden. © Copyright ABB

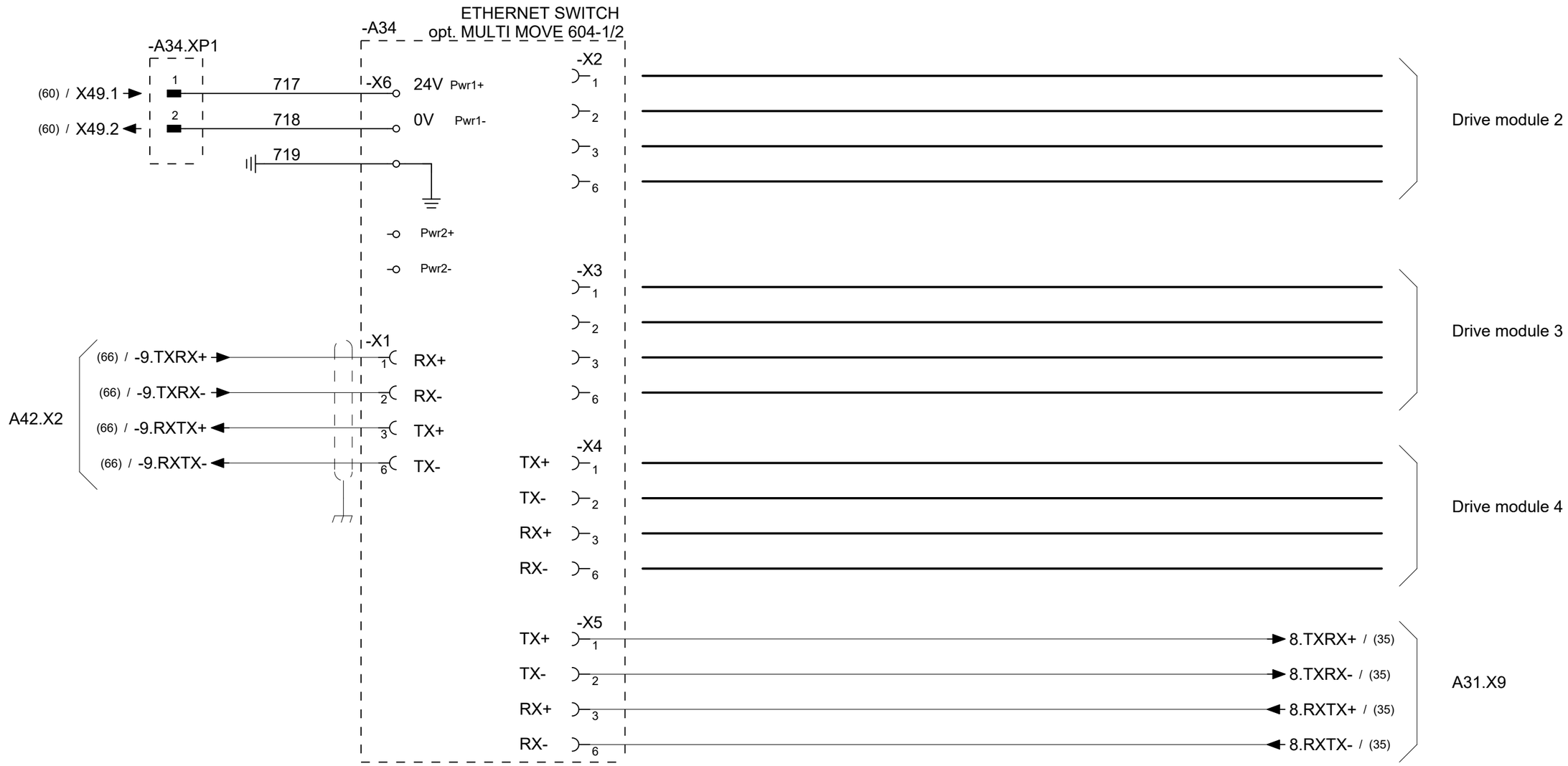

Latest revision:		Lab/Office: RA/RDP	IRC5 DESIGN Rel: 24:B ETHERNET SWITCH A34, option MULTI MOVE 604-1/2	Status: APPROVED	Plant: = Location: + Sublocation: +
Prepared by, date: A Hägglund	Approved by, date: S Hällgren 2024-03-18			Document no. 3HAC024480-011	Rev. Ind 18
					Page 40.1 Next 41 Total 164

We reserve all rights in this document and in the information contained therein. Reproduction, use or disclosure to third parties without express authority is strictly forbidden. © Copyright ABB

if opt. 901-1

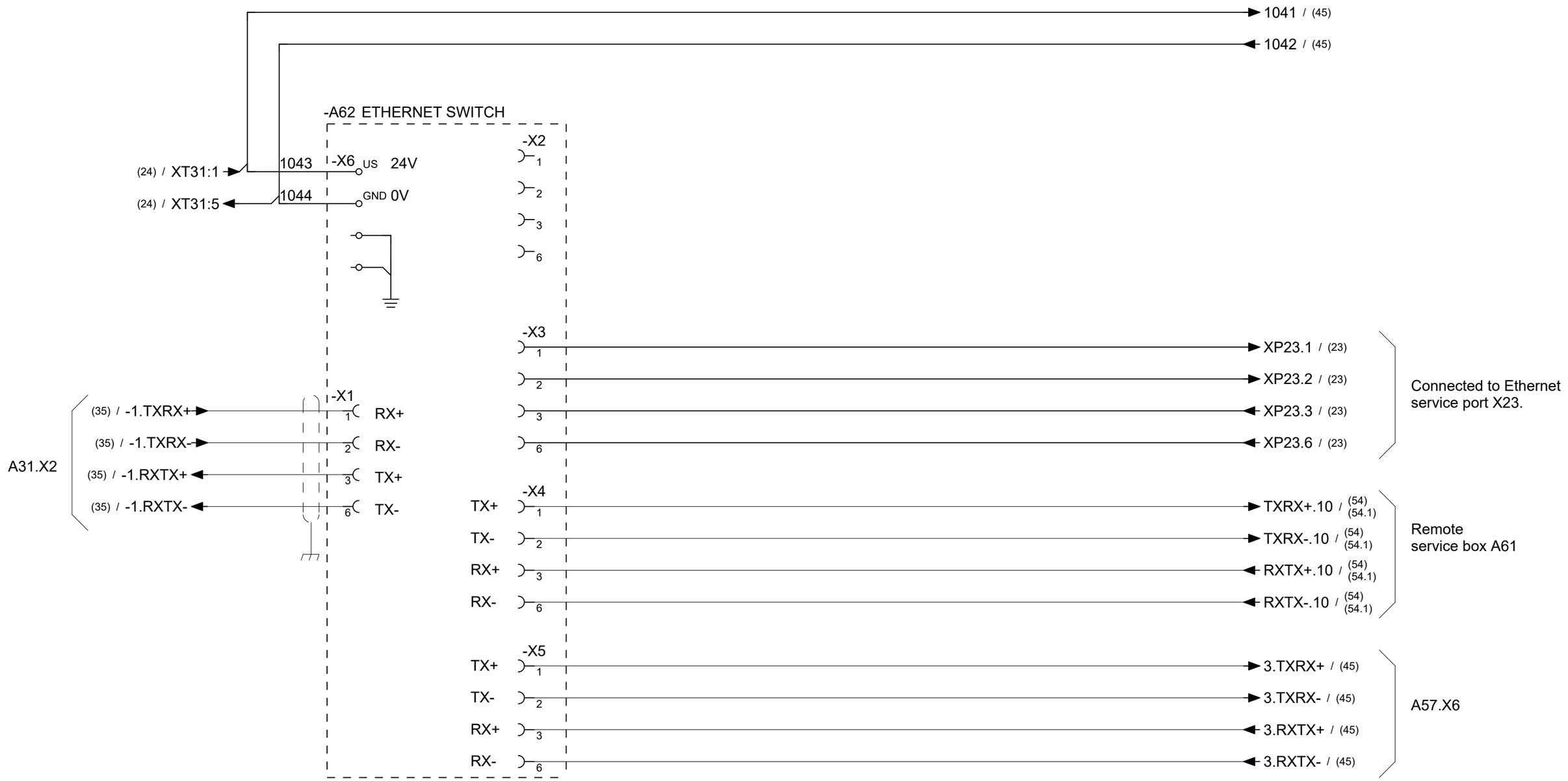

Latest revision:		ABB	Lab/Office: RA/RDP	IRC5 DESIGN Rel: 24:B ETHERNET SWITCH A62	Status: APPROVED	Plant: = Location: + Sublocation: +
					Document no. 3HAC024480-011	Rev. Ind 18
						Page 41 Next 42 Total 164
Prepared by, date: A Hägglund	Approved by, date: S Hällgren 2024-03-18					

We reserve all rights in this document and in the information contained therein. Reproduction, use or disclosure to third parties without express authority is strictly forbidden. © Copyright ABB

Robot controller

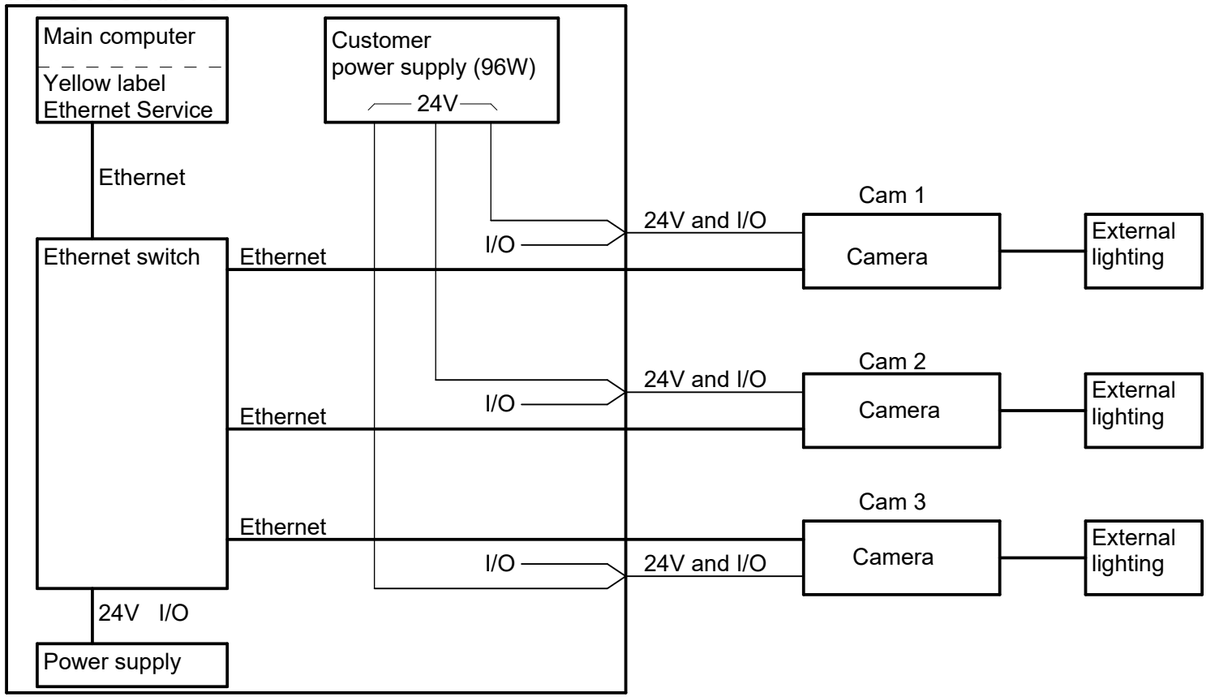

Opt. INSIDE DOOR WITH ETHERNET for CAMERAS

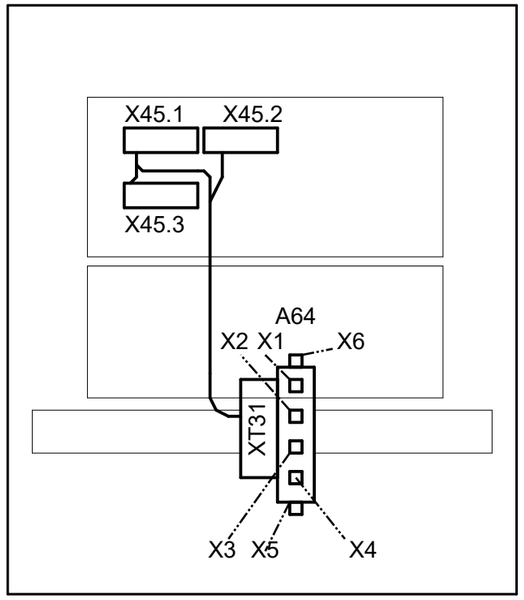

Opt.1550-1
Robot controller with Conveyor Tracking.

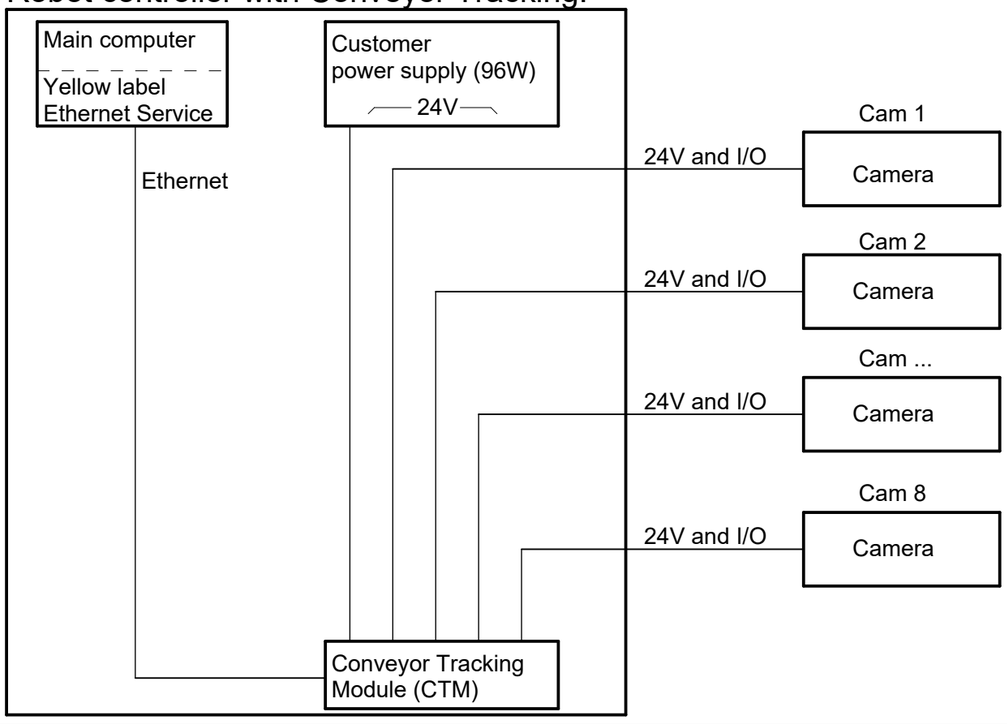

Opt. INSIDE DOOR WITH CTM

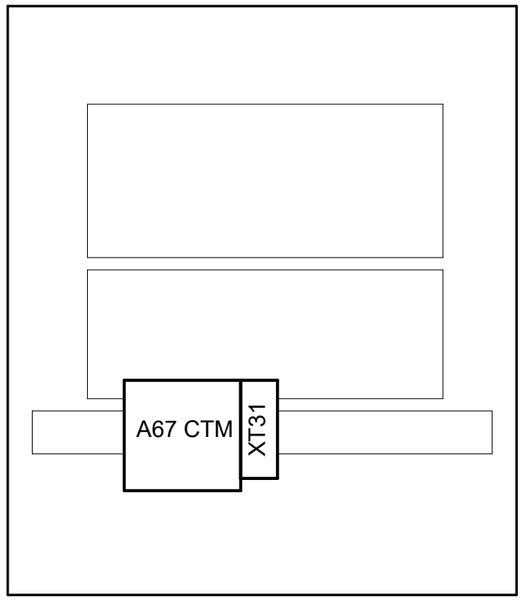

We reserve all rights in this document and in the information contained therein. Reproduction, use or disclosure to third parties without express authority is strictly forbidden. © Copyright ABB

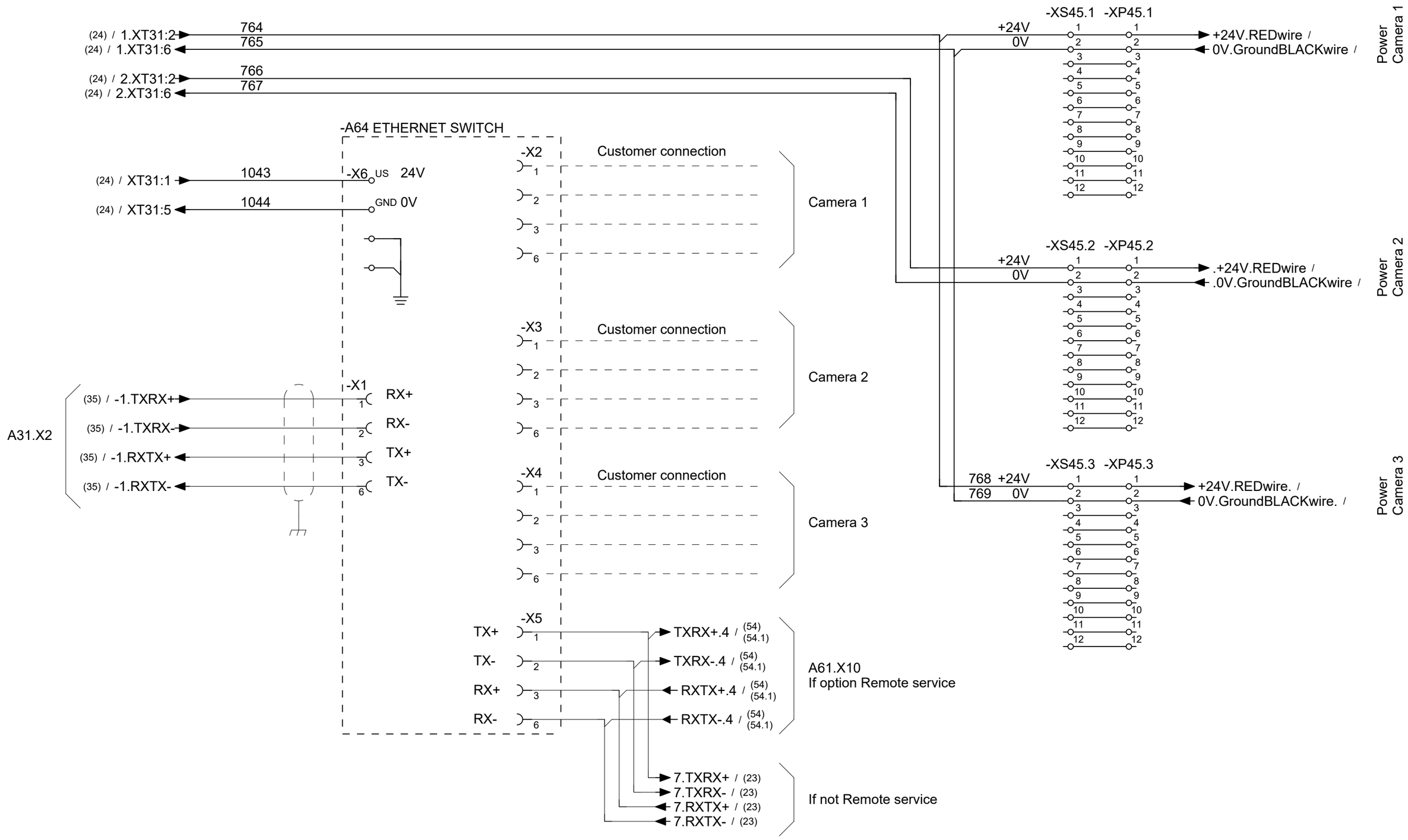

Latest revision:		Lab/Office: RA/RDP	IRC5 DESIGN Rel: 24:B ETHERNET SWITCH A64/CAMERA	Status: APPROVED	Plant: = Location: + Sublocation: +
Prepared by, date: A Hägglund	Approved by, date: S Hällgren 2024-03-18			Document no. 3HAC024480-011	Rev. Ind 18

We reserve all rights in this document and in the information contained therein. Reproduction, use or disclosure to third parties without express authority is strictly forbidden. © Copyright ABB

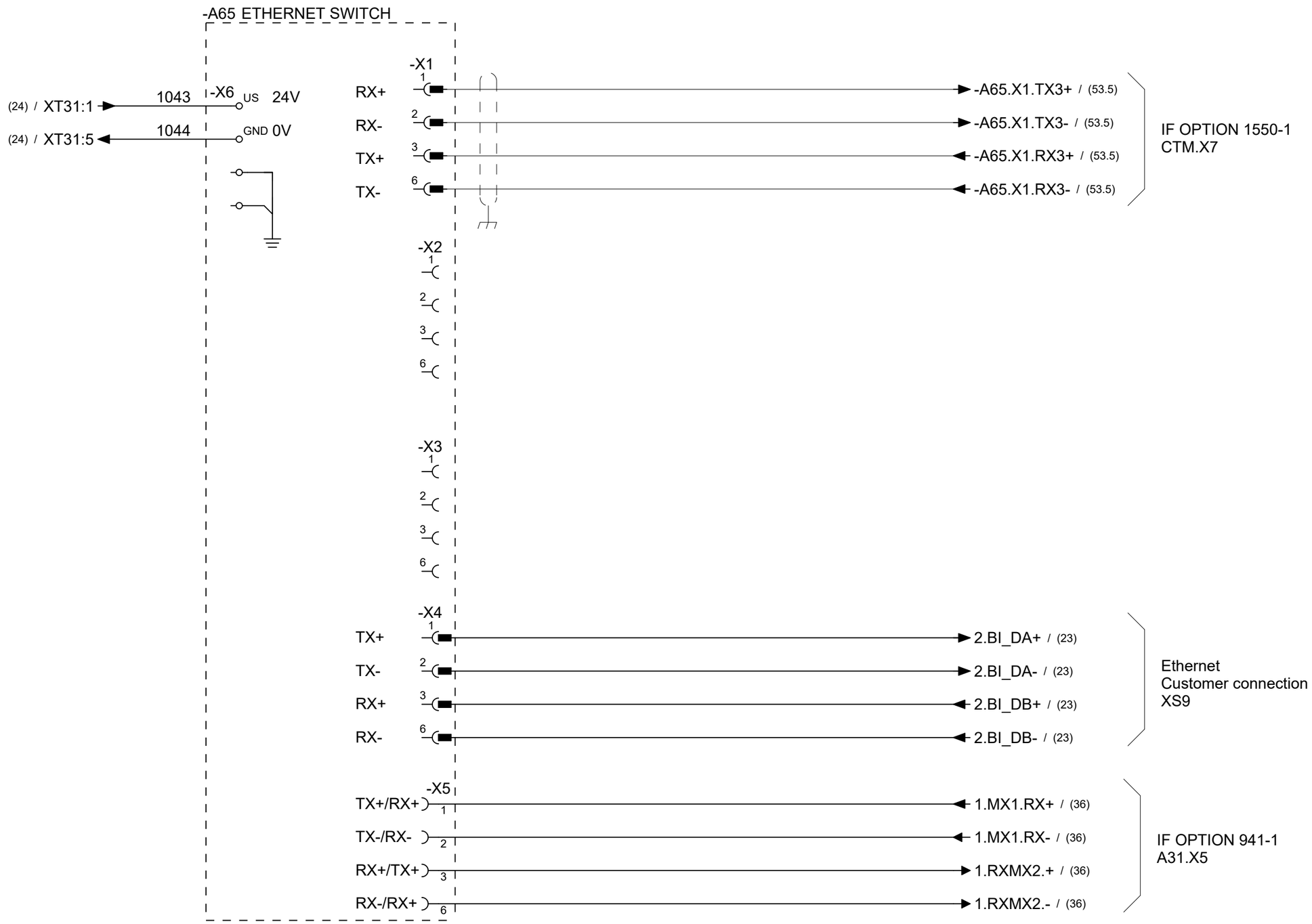

Latest revision:		ABB	Lab/Office: RA/RDP	IRC5 DESIGN Rel: 24:B ETHERNET SWITCH A65	Status: APPROVED	Plant: = Location: + Sublocation: +
Prepared by, date: A Hägglund	Approved by, date: S Hällgren 2024-03-18				Document no. 3HAC024480-011	Rev. Ind 18

We reserve all rights in this document and in the information contained therein. Reproduction, use or disclosure to third parties without express authority is strictly forbidden. © Copyright ABB

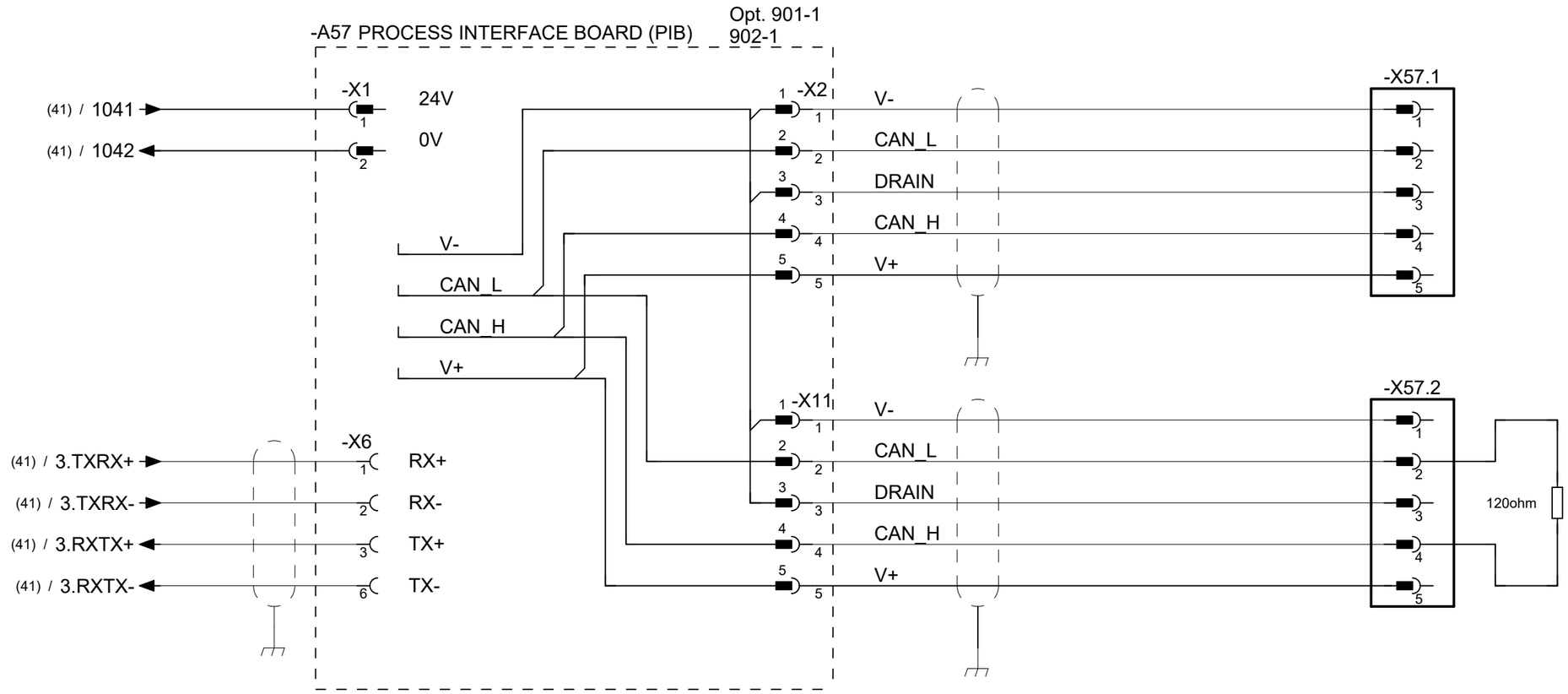

Latest revision:		ABB	Lab/Office: RA/RDP	IRC5 DESIGN Rel: 24:B DISPENCE PAC SUPPORT A57	Status: APPROVED	Plant: = Location: + Sublocation: +
Prepared by, date: A Hägglund	Approved by, date: S Hällgren 2024-03-18				Document no. 3HAC024480-011	Rev. Ind 18
						Page 45 Next 46 Total 164

We reserve all rights in this document and in the information contained therein. Reproduction, use or disclosure to third parties without express authority is strictly forbidden. © Copyright ABB

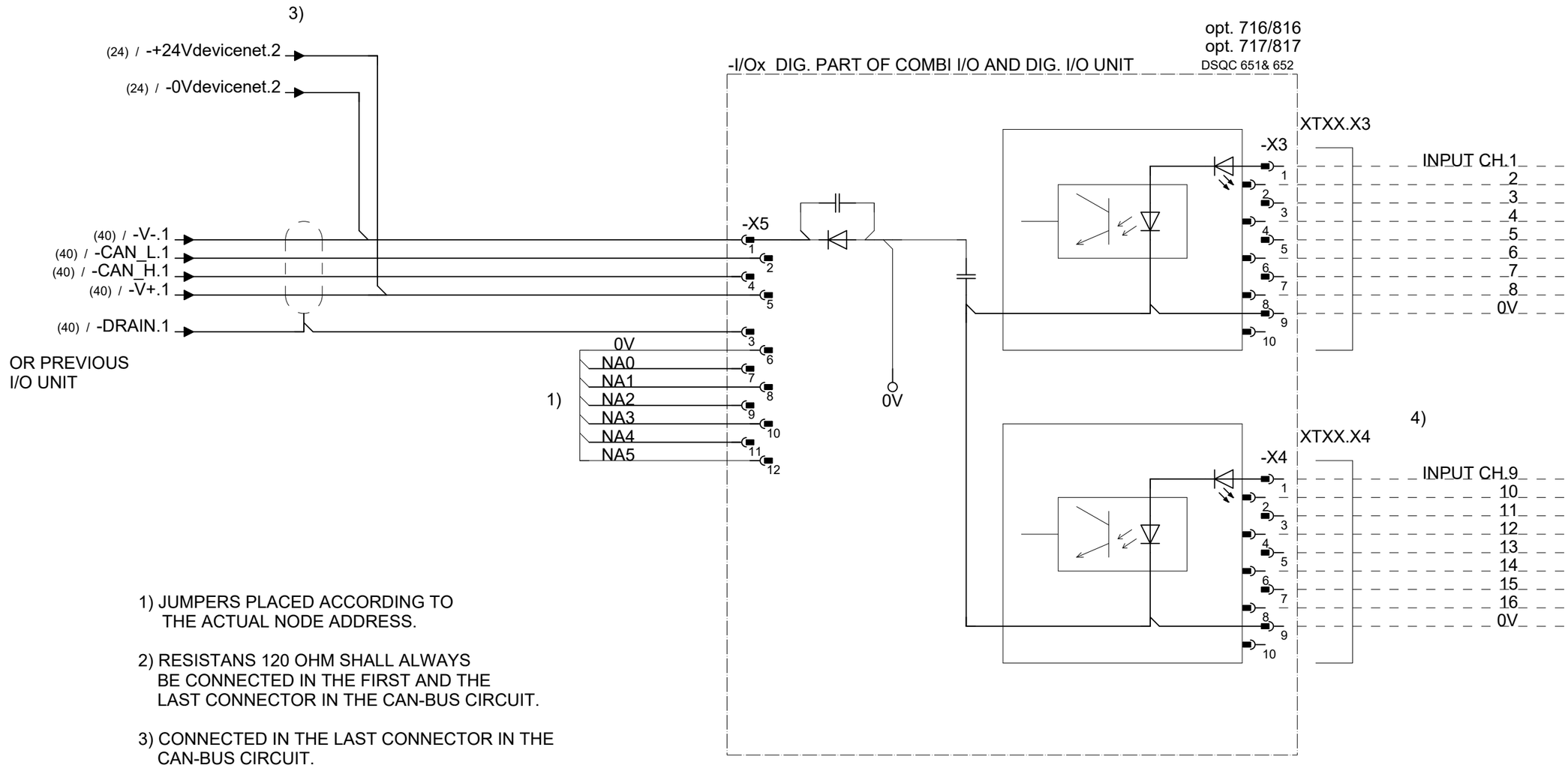

1) JUMPERS PLACED ACCORDING TO THE ACTUAL NODE ADDRESS.

2) RESISTANS 120 OHM SHALL ALWAYS BE CONNECTED IN THE FIRST AND THE LAST CONNECTOR IN THE CAN-BUS CIRCUIT.

3) CONNECTED IN THE LAST CONNECTOR IN THE CAN-BUS CIRCUIT.

4) ONLY FOR DIGITAL I/O DSQC 652.

We reserve all rights in this document and in the information contained therein. Reproduction, use or disclosure to third parties without express authority is strictly forbidden. © Copyright ABB

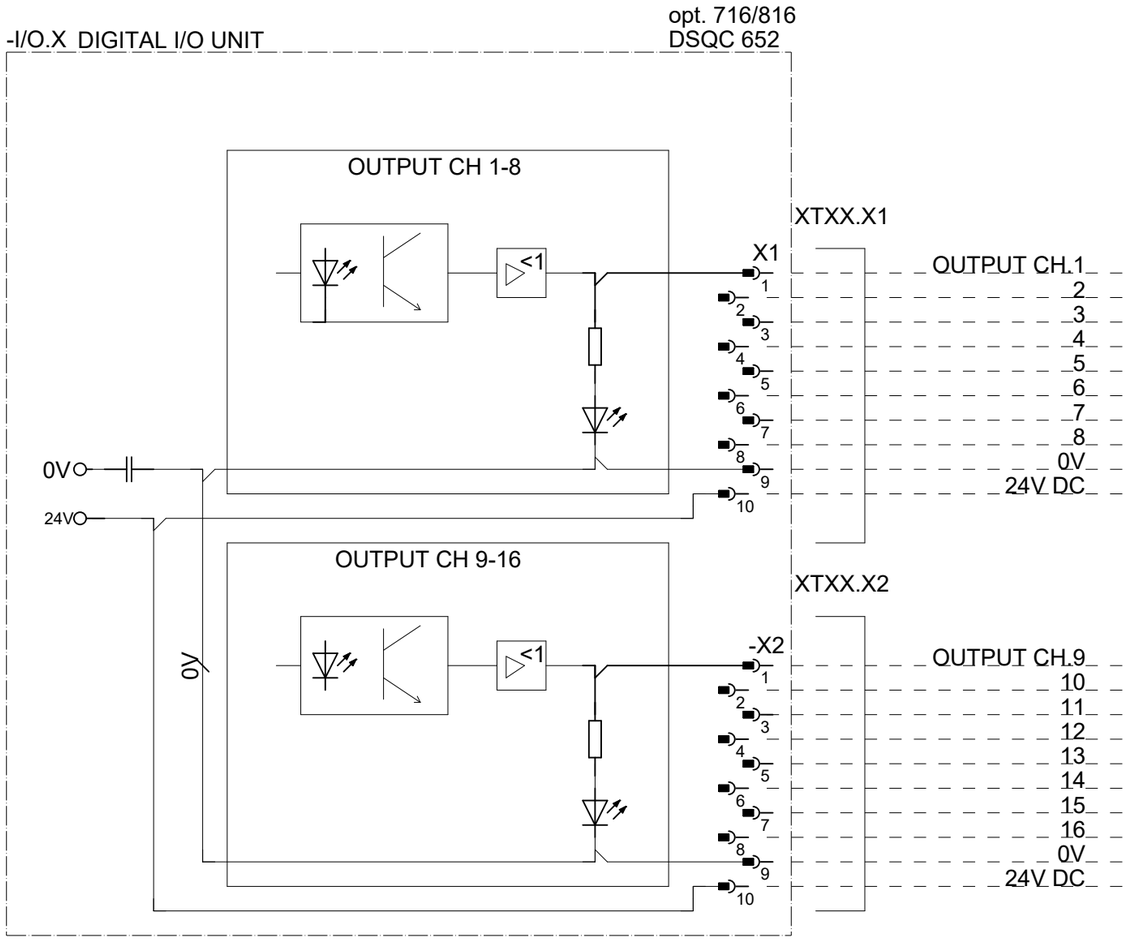

Latest revision:		Lab/Office: RA/RDP	IRC5 DESIGN Rel: 24:B DIGITAL I/O UNIT DSQC652	Status: APPROVED	Plant: = Location: + Sublocation: +
Prepared by, date: A Hägglund	Approved by, date: S Hällgren 2024-03-18			Document no. 3HAC024480-011	Rev. Ind 18

We reserve all rights in this document and in the information contained therein. Reproduction, use or disclosure to third parties without express authority is strictly forbidden. © Copyright ABB

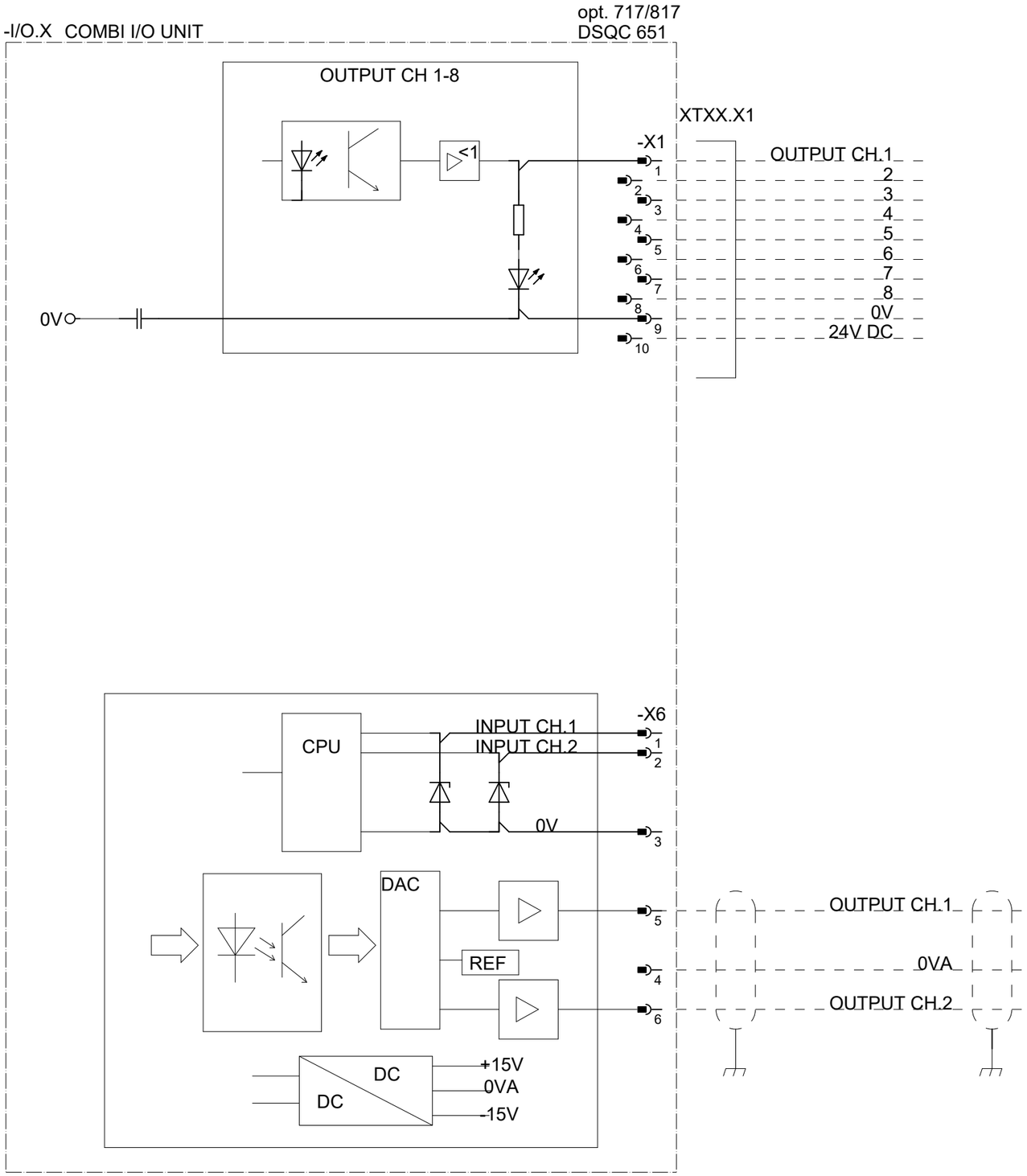

Latest revision:		Lab/Office: RA/RDP	IRC5 DESIGN Rel: 24:B COMBI I/O UNIT DSQC651	Status: APPROVED	Plant: = Location: + Sublocation: +
Prepared by, date: A Hägglund	Approved by, date: S Hällgren 2024-03-18			Document no. 3HAC024480-011	Rev. Ind 18

We reserve all rights in this document and in the information contained therein. Reproduction, use or disclosure to third parties without express authority is strictly forbidden. © Copyright ABB

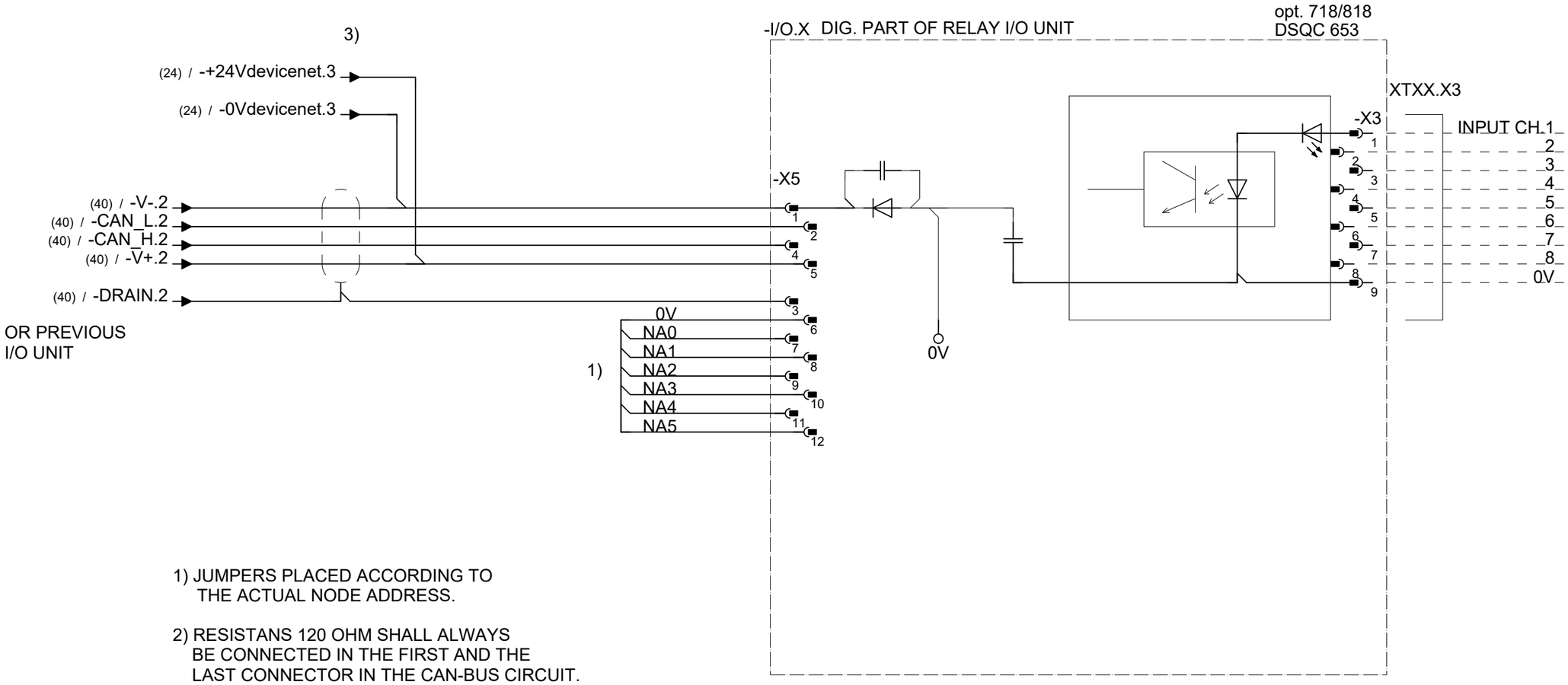

1) JUMPERS PLACED ACCORDING TO
THE ACTUAL NODE ADDRESS.

2) RESISTANS 120 OHM SHALL ALWAYS
BE CONNECTED IN THE FIRST AND THE
LAST CONNECTOR IN THE CAN-BUS CIRCUIT.

3) CONNECTED IN THE LAST CONNECTOR IN THE
CAN-BUS CIRCUIT.

Latest revision:		Lab/Office: RA/RDP	IRC5 DESIGN Rel: 24:B RELAY I/O UNIT DSQC653	Status: APPROVED	Plant: = Location: + Sublocation: +	
Prepared by, date: A Hägglund	Approved by, date: S Hällgren 2024-03-18			Document no. 3HAC024480-011	Rev. Ind 18	Page 49 Next 50 Total 164

We reserve all rights in this document and in the information contained therein. Reproduction, use or disclosure to third parties without express authority is strictly forbidden. © Copyright ABB

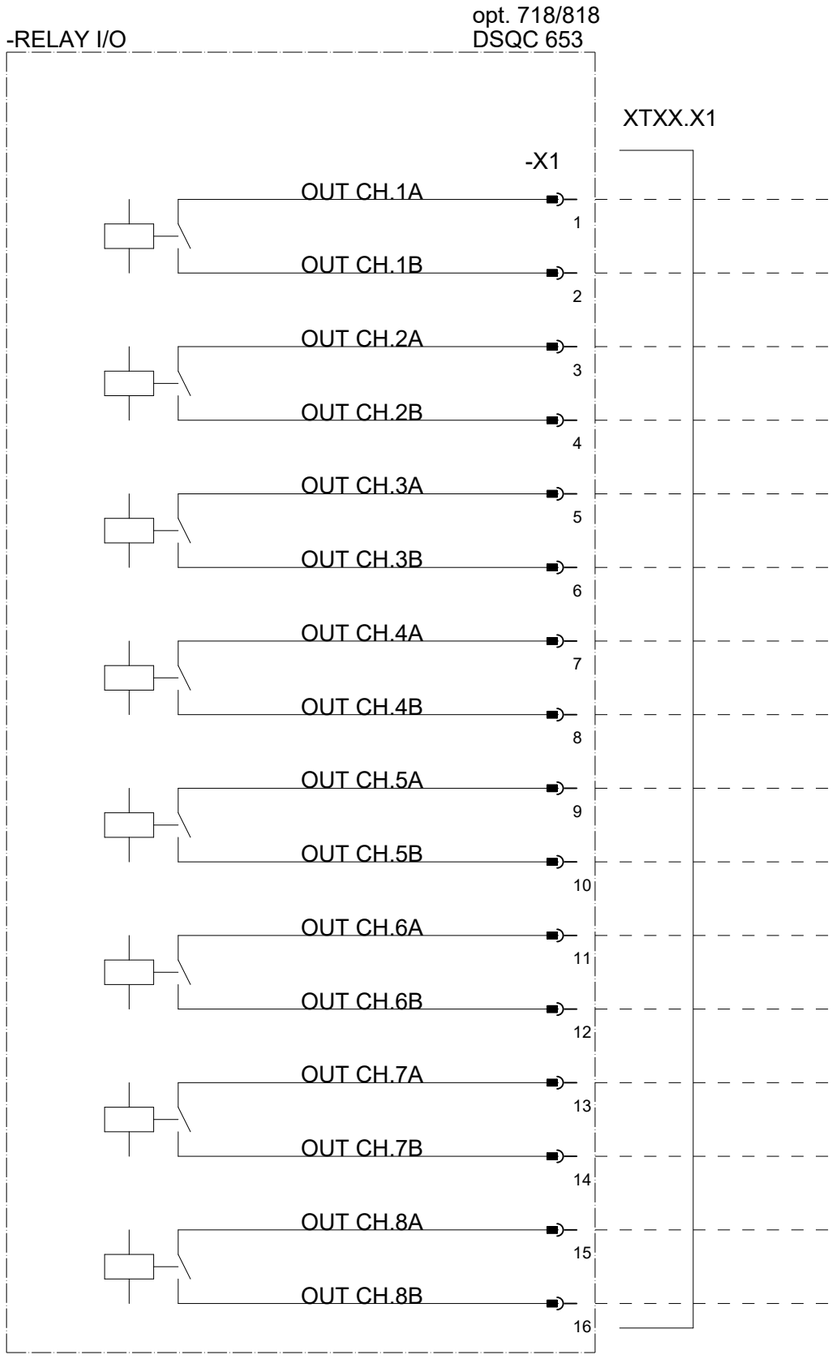

Latest revision:		ABB Lab/Office: RA/RDP	IRC5 DESIGN Rel: 24:B RELAY I/O UNIT DSQC653	Status: APPROVED	Plant: = Location: + Sublocation: +
Prepared by, date: A Hägglund	Approved by, date: S Hällgren 2024-03-18			Document no. 3HAC024480-011	Rev. Ind 18

We reserve all rights in this document and in the information contained therein. Reproduction, use or disclosure to third parties without express authority is strictly forbidden. © Copyright ABB

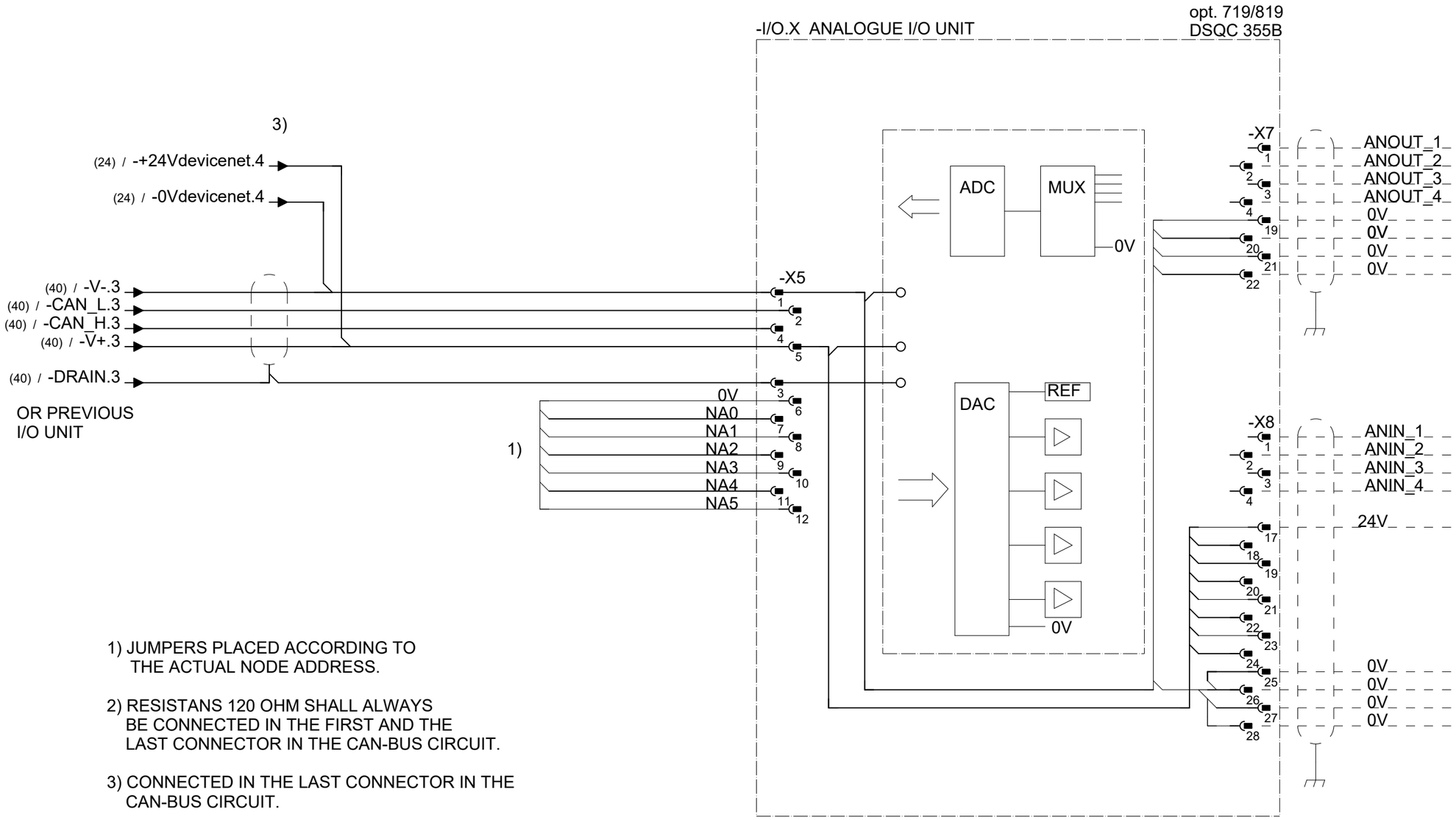

1) JUMPERS PLACED ACCORDING TO THE ACTUAL NODE ADDRESS.

2) RESISTANS 120 OHM SHALL ALWAYS BE CONNECTED IN THE FIRST AND THE LAST CONNECTOR IN THE CAN-BUS CIRCUIT.

3) CONNECTED IN THE LAST CONNECTOR IN THE CAN-BUS CIRCUIT.

Wire 704 was exchanged to 776 in 18.2
Wire 703 was exchanged to 775 in 18.2

Opt 1541-1
opt 1541-2
DSQC1030

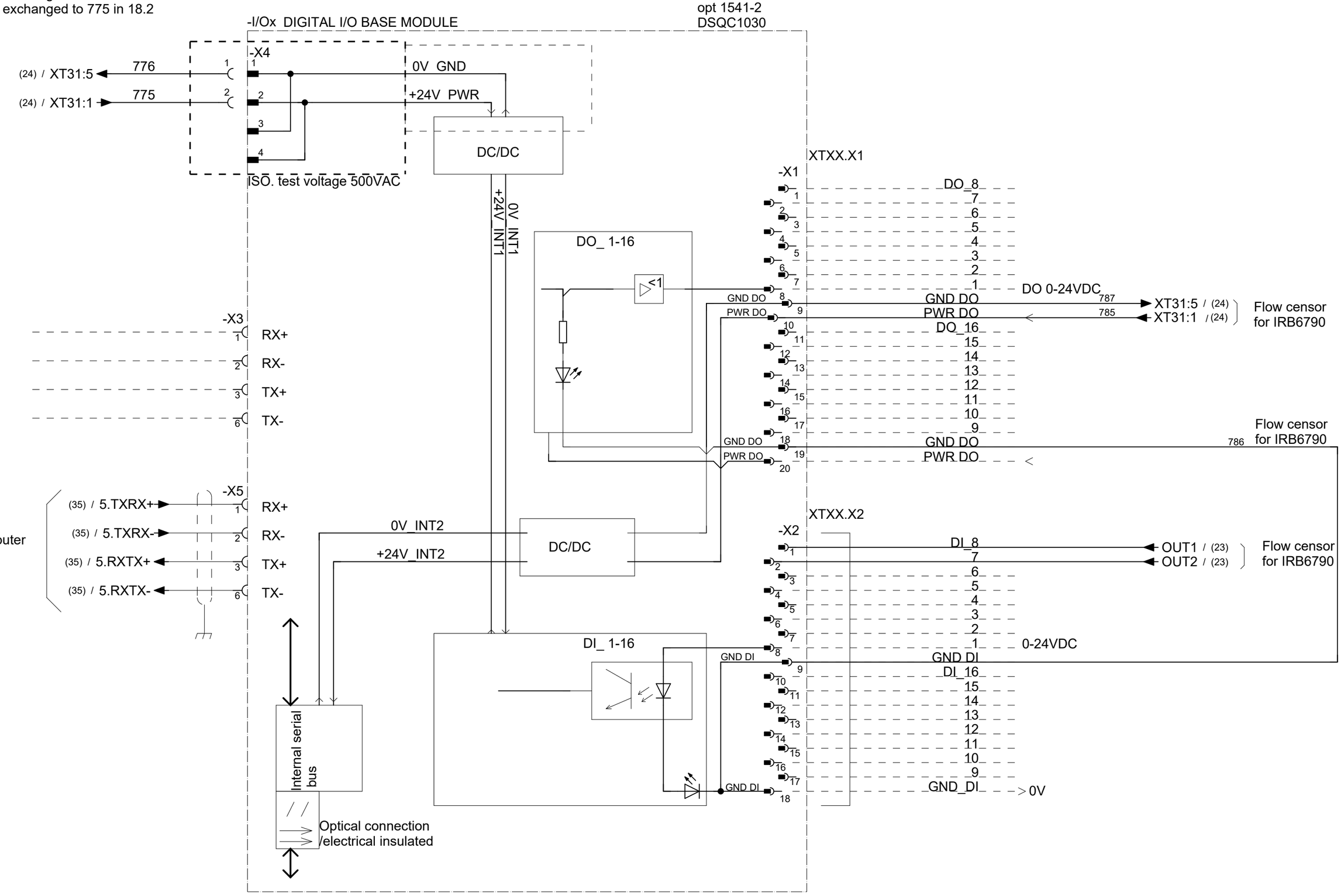

We reserve all rights in this document and in the information contained therein. Reproduction, use or disclosure to third parties without express authority is strictly forbidden. © Copyright ABB

Latest revision:		Lab/Office: RA/RDP	IRC5 DESIGN Rel: 24:B Local I/O Digital Base 16in/16out	Status: APPROVED	Plant: = Location: + Sublocation: +
Prepared by, date: A Hägglund	Approved by, date: S Hällgren 2024-03-18			Document no. 3HAC024480-011	Rev. Ind 18

We reserve all rights in this document and in the information contained therein. Reproduction, use or disclosure to third parties without express authority is strictly forbidden. © Copyright ABB

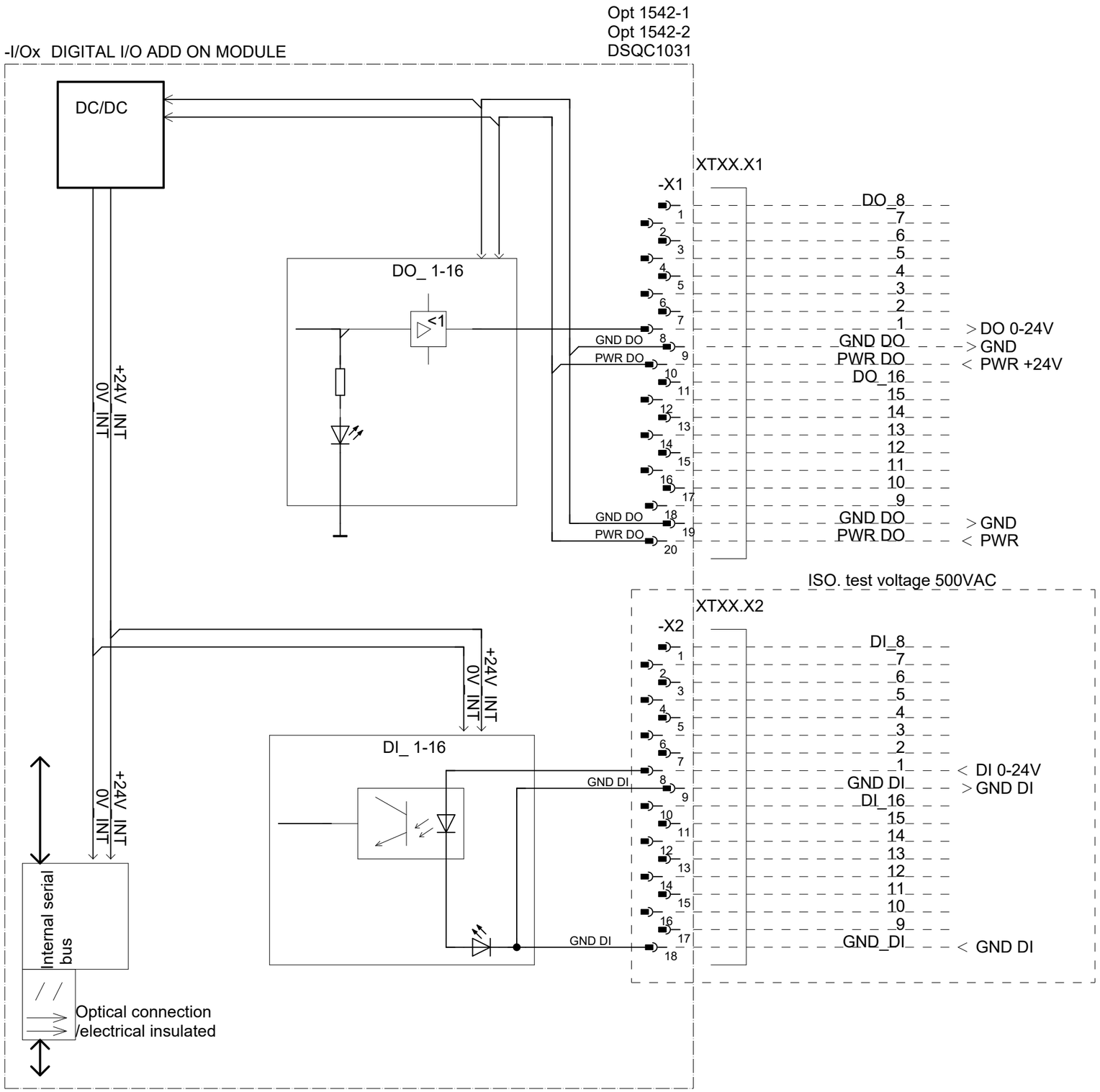

Latest revision:		Lab/Office: RA/RDP	IRC5 DESIGN Rel: 24:B Local I/O Digital add on 16in/16out	Status: APPROVED	Plant: = Location: + Sublocation: +
Prepared by, date: A Hägglund	Approved by, date: S Hällgren 2024-03-18			Document no. 3HAC024480-011	Rev. Ind 18
					Page 51.4 Next 51.6 Total 164

We reserve all rights in this document and in the information contained therein. Reproduction, use or disclosure to third parties without express authority is strictly forbidden. © Copyright ABB

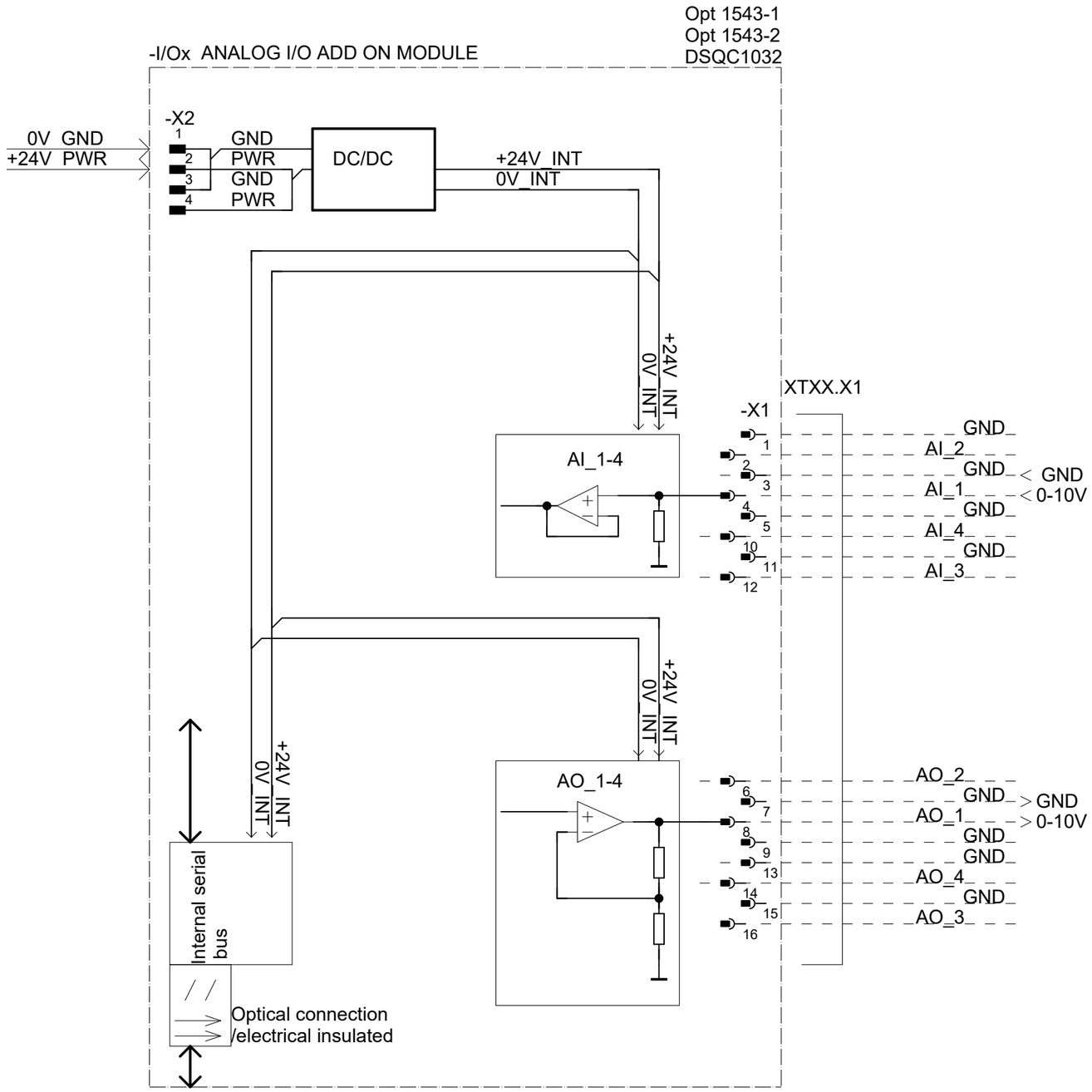

Latest revision:		Lab/Office: RA/RDP	IRC5 DESIGN Rel: 24:B Local I/O Analog add on 4in/4out	Status: APPROVED	Plant: = Location: + Sublocation: +
Prepared by, date: A Hägglund	Approved by, date: S Hällgren 2024-03-18			Document no. 3HAC024480-011	Rev. Ind 18
					Page 51.6 Next 51.8 Total 164

We reserve all rights in this document and in the information contained therein. Reproduction, use or disclosure to third parties without express authority is strictly forbidden. © Copyright ABB

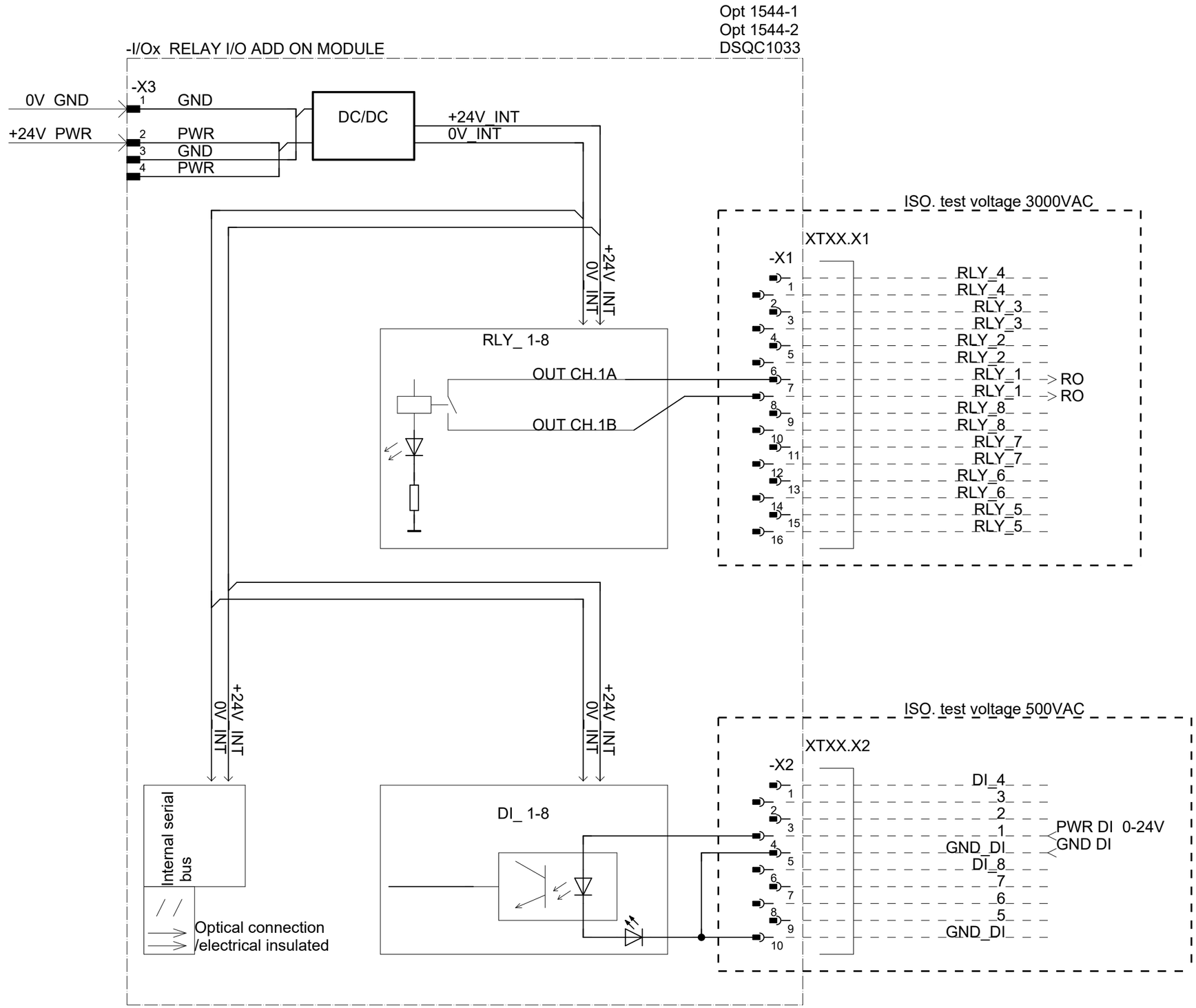

Latest revision:		Lab/Office: RA/RDP	IRC5 DESIGN Rel: 24:B Local I/O Relay add on 8RO/8DI	Status: APPROVED	Plant: = Location: + Sublocation: +
Prepared by, date: A Hägglund	Approved by, date: S Hällgren 2024-03-18			Document no. 3HAC024480-011	Rev. Ind 18
					Page 51.8 Next 52 Total 164

We reserve all rights in this document and in the information contained therein. Reproduction, use or disclosure to third parties without express authority is strictly forbidden. © Copyright ABB

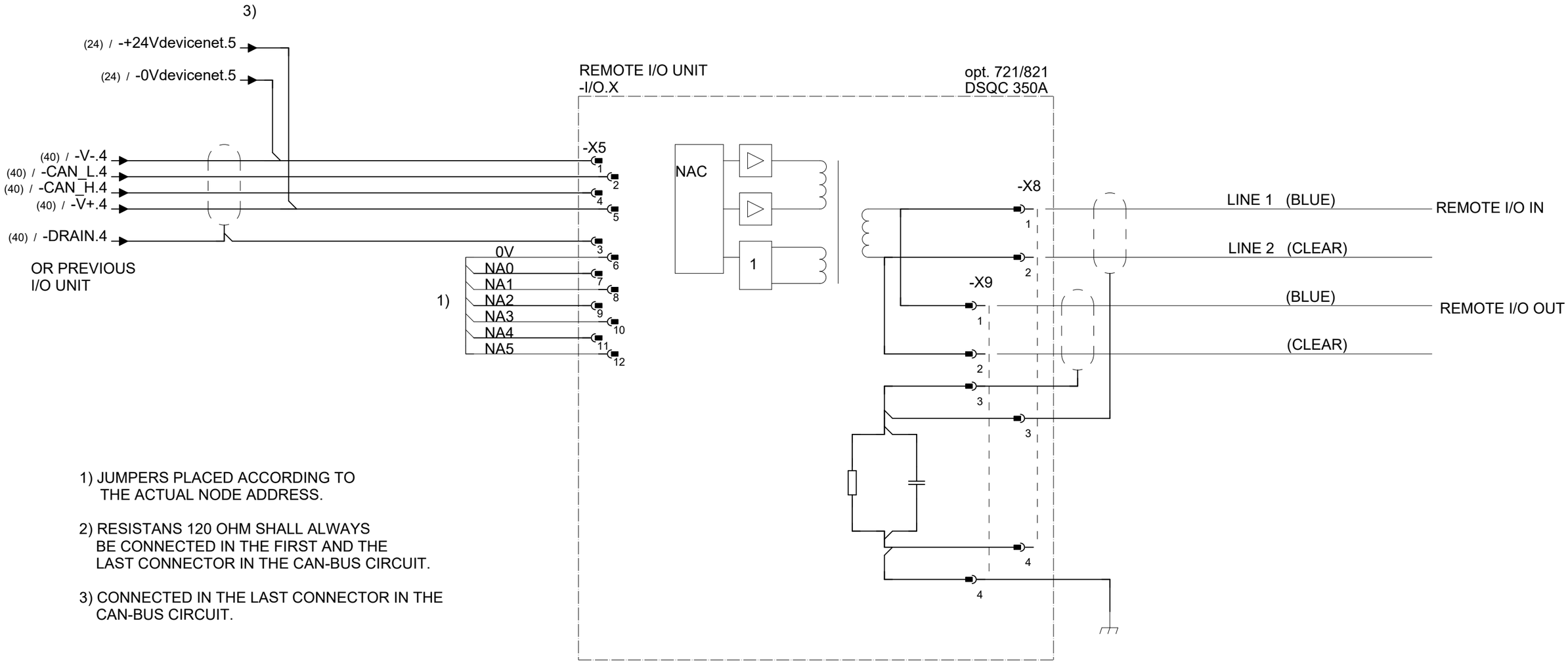

1) JUMPERS PLACED ACCORDING TO THE ACTUAL NODE ADDRESS.

2) RESISTANS 120 OHM SHALL ALWAYS BE CONNECTED IN THE FIRST AND THE LAST CONNECTOR IN THE CAN-BUS CIRCUIT.

3) CONNECTED IN THE LAST CONNECTOR IN THE CAN-BUS CIRCUIT.

Latest revision:		ABB	Lab/Office: RA/RDP	IRC5 DESIGN Rel: 24:B REMOTE I/O UNIT DSQC350A	Status: APPROVED	Plant: = Location: + Sublocation: +
Prepared by, date: A Hägglund	Approved by, date: S Hällgren 2024-03-18				Document no. 3HAC024480-011	Rev. Ind 18

We reserve all rights in this document and in the information contained therein. Reproduction, use or disclosure to third parties without express authority is strictly forbidden. © Copyright ABB

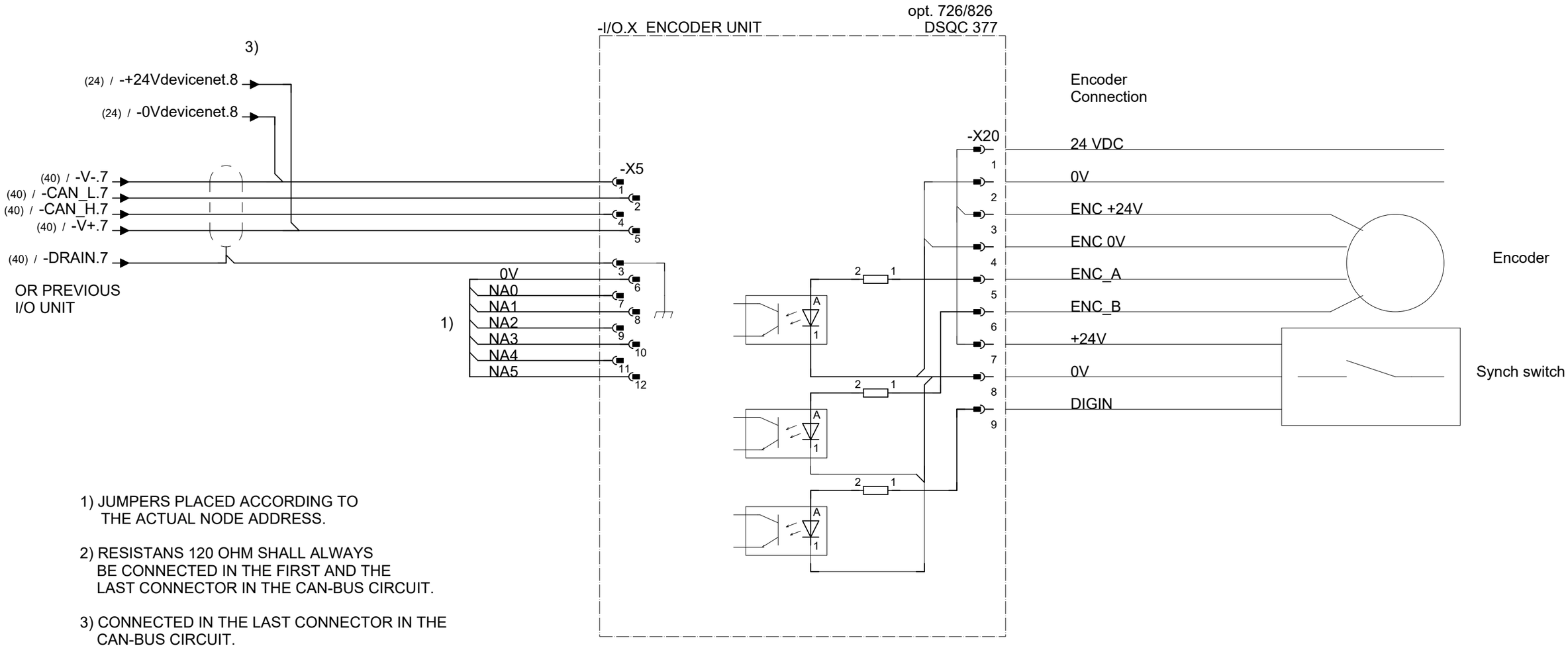

1) JUMPERS PLACED ACCORDING TO THE ACTUAL NODE ADDRESS.

2) RESISTANS 120 OHM SHALL ALWAYS BE CONNECTED IN THE FIRST AND THE LAST CONNECTOR IN THE CAN-BUS CIRCUIT.

3) CONNECTED IN THE LAST CONNECTOR IN THE CAN-BUS CIRCUIT.

Latest revision:	ABB	Lab/Office: RA/RDP	IRC5 DESIGN Rel: 24:B ENCODER UNIT DSQC377	Status: APPROVED	Plant: = Location: + Sublocation: +
Prepared by, date: A Hägglund / Approved by, date: S Hällgren 2024-03-18				Document no. 3HAC024480-011	Rev. Ind 18
					Page 53 Next 53.5 Total 164

We reserve all rights in this document and in the information contained therein. Reproduction, use or disclosure to third parties without express authority is strictly forbidden. © Copyright ABB

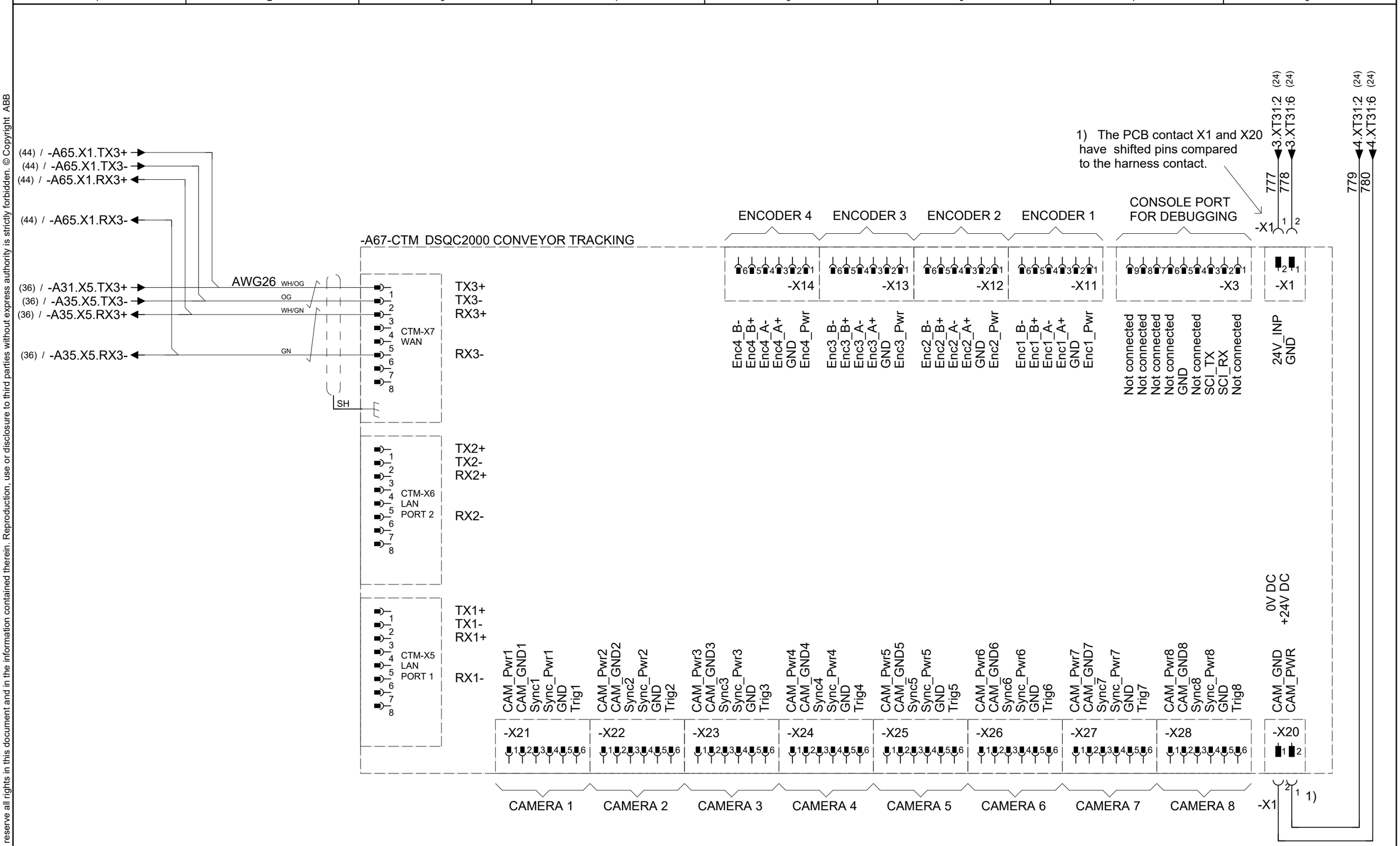

OPTION 1550-1

Latest revision:		Lab/Office: RA/RDP	IRC5 DESIGN Rel: 24:B CONVEYOR TRACKING MODULE, DSQC 2000	Status: APPROVED	Plant: = Location: + Sublocation: +
Prepared by, date: A Hägglund	Approved by, date: S Hällgren 2024-03-18			Document no. 3HAC024480-011	Rev. Ind 18

1) Only connected if Opt. REMOTE SERVICE BOX

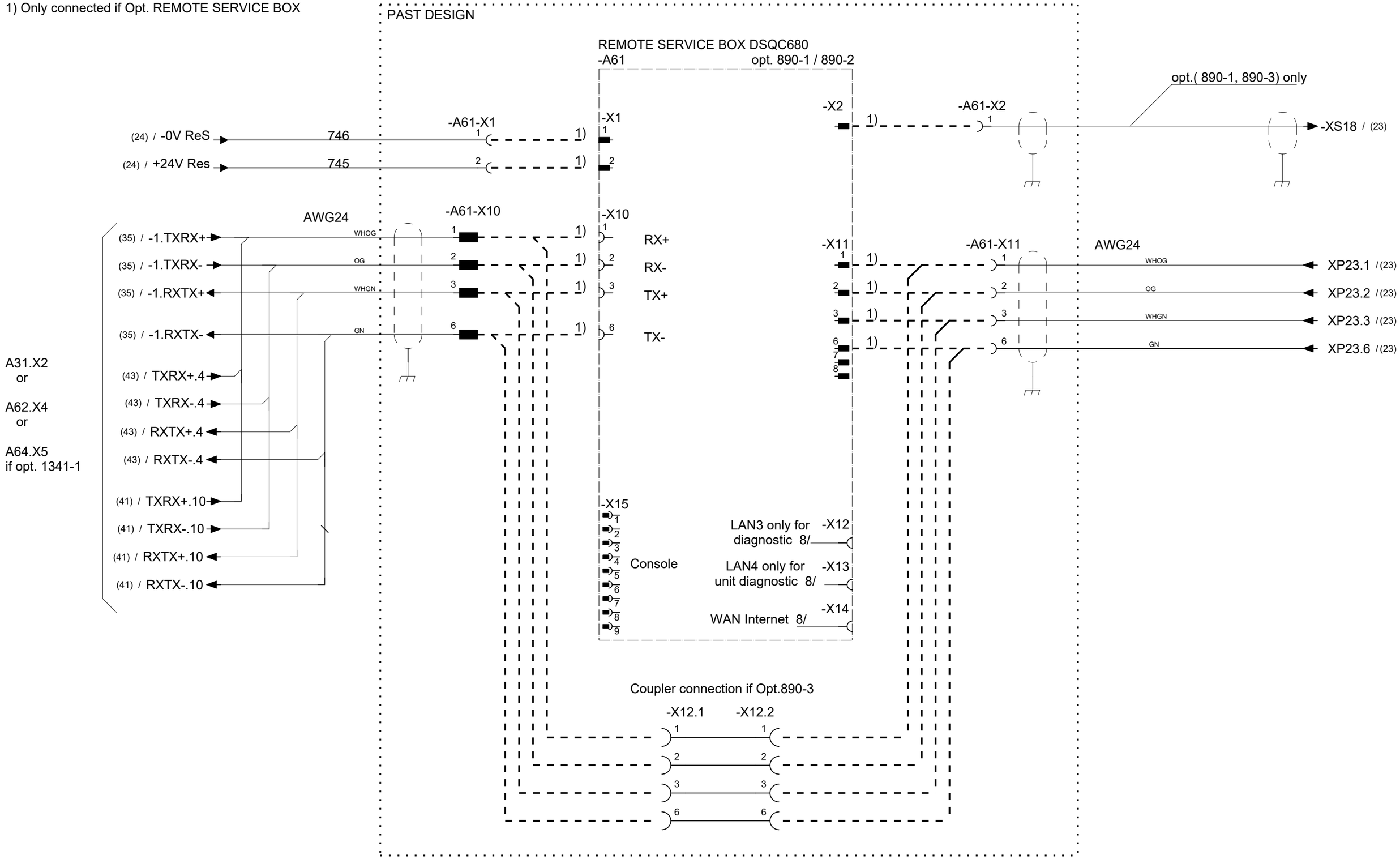

We reserve all rights in this document and in the information contained therein. Reproduction, use or disclosure to third parties without express authority is strictly forbidden. © Copyright ABB

Latest revision:		Lab/Office: RA/RDP	IRC5 DESIGN Rel: 24:B REMOTE SERVICE BOX DSQC680 to Rel. 16.1	Status: APPROVED	Plant: = Location: + Sublocation: +
Prepared by, date: A Hägglund	Approved by, date: S Hällgren 2024-03-18			Document no. 3HAC024480-011	Rev. Ind 18

1) Only connected if Opt. REMOTE SERVICE BOX

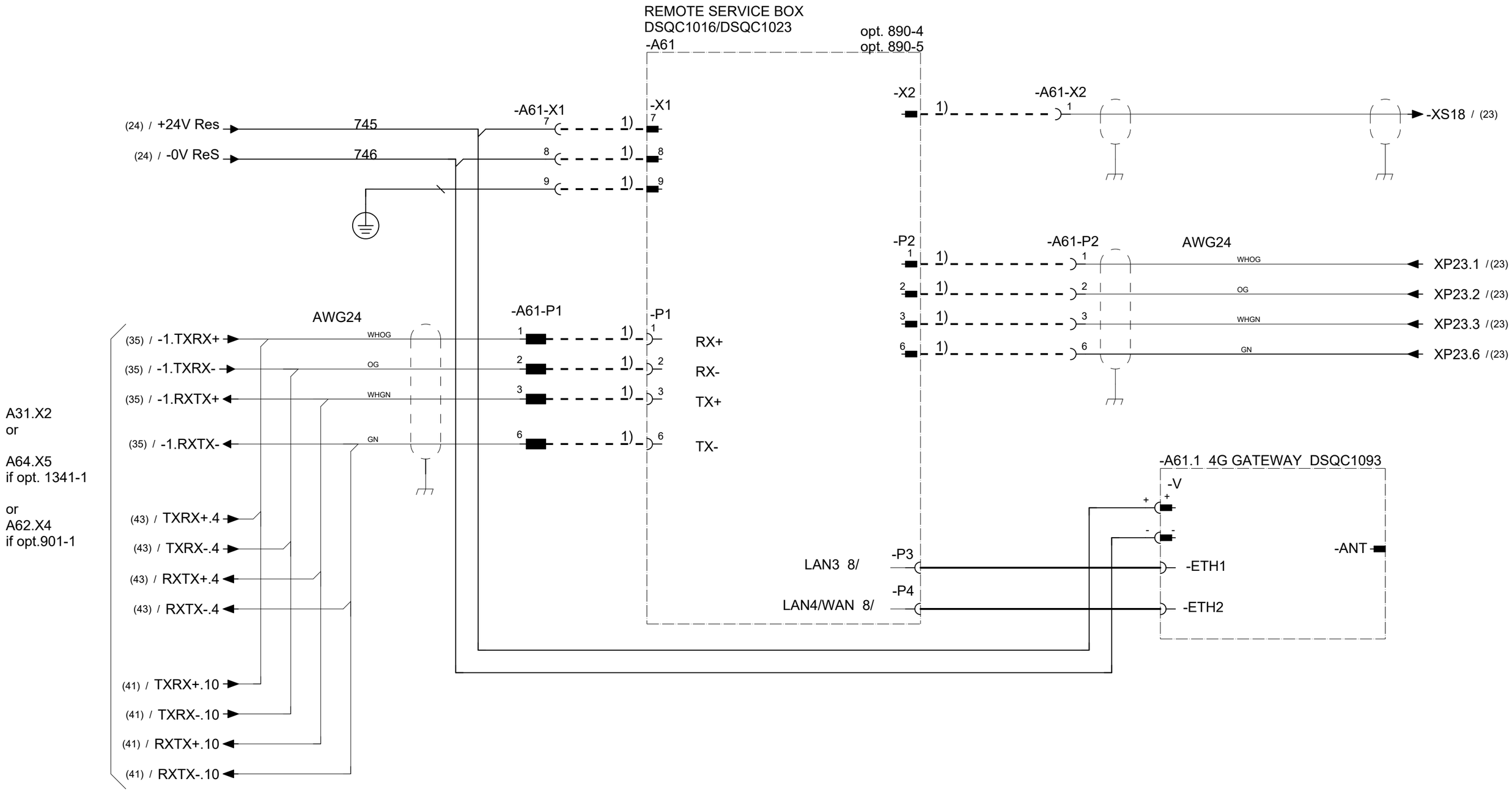

We reserve all rights in this document and in the information contained therein. Reproduction, use or disclosure to third parties without express authority is strictly forbidden. © Copyright ABB

Latest revision:		Lab/Office: RA/RDP	IRC5 DESIGN Rel: 24:B REMOTE SERVICE BOX DSQC1016/DSQC1023 from Rel. 16.2	Status: APPROVED	Plant: = Location: + Sublocation: +
Prepared by, date: A Hägglund	Approved by, date: S Hällgren 2024-03-18			Document no. 3HAC024480-011	Rev. Ind 18

We reserve all rights in this document and in the information contained therein. Reproduction, use or disclosure to third parties without express authority is strictly forbidden. © Copyright ABB

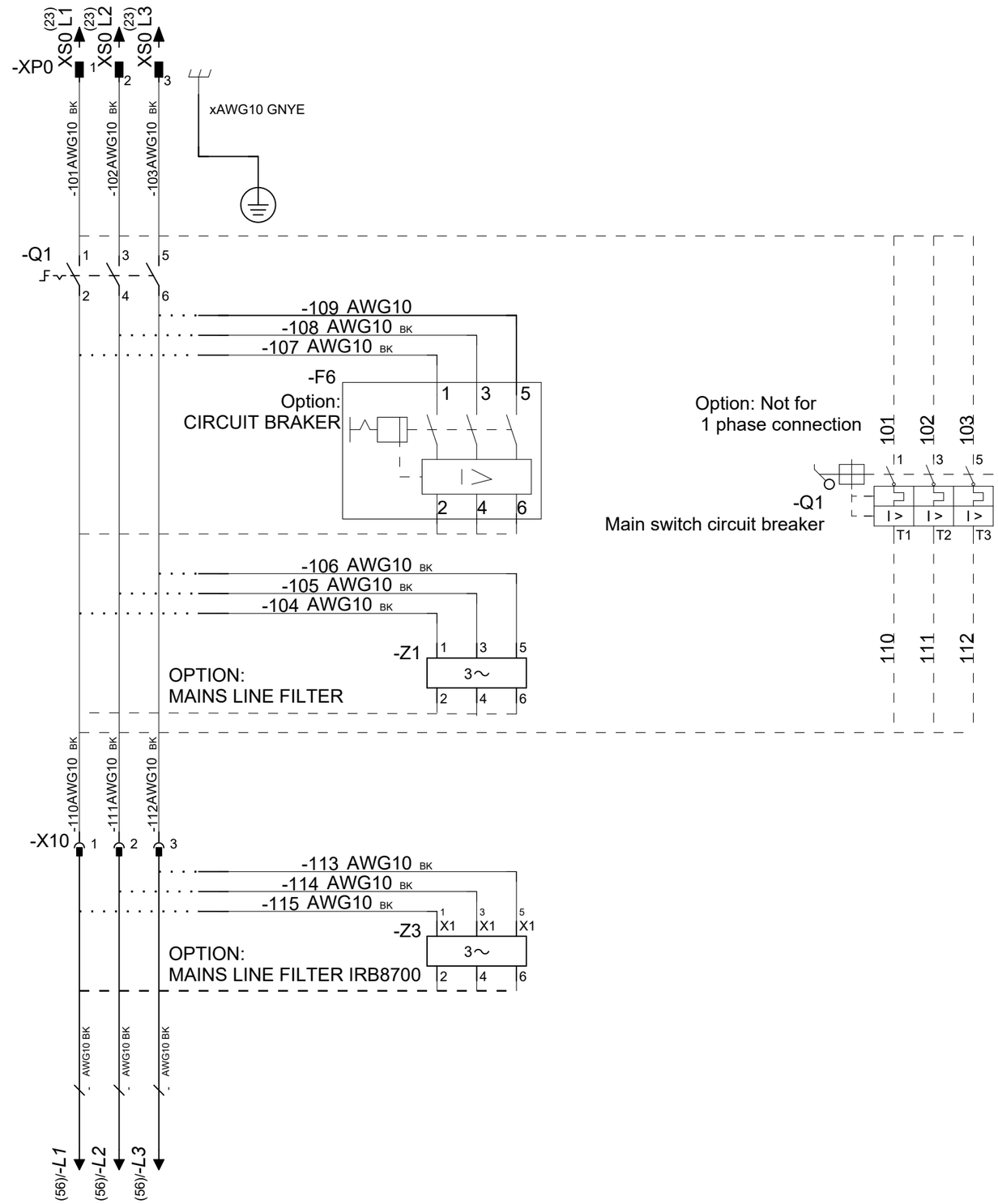

If Option: 3 Phase
TRANSFORMER UNIT

Latest revision:		Lab/Office: RA/RDP	IRC5 DESIGN Rel: 24:B MAINS CONNECTION XP0, Q1, F6, Z1, Z3	Status: APPROVED	Plant: = Location: + Sublocation: +	
				Document no. 3HAC024480-011	Rev. Ind 18	Page 55 Next 55.5 Total 164
Prepared by, date: A Hägglund	Approved by, date: S Hällgren 2024-03-18					

We reserve all rights in this document and in the information contained therein. Reproduction, use or disclosure to third parties without express authority is strictly forbidden. © Copyright ABB

1,2/2,5kVA
Transformer

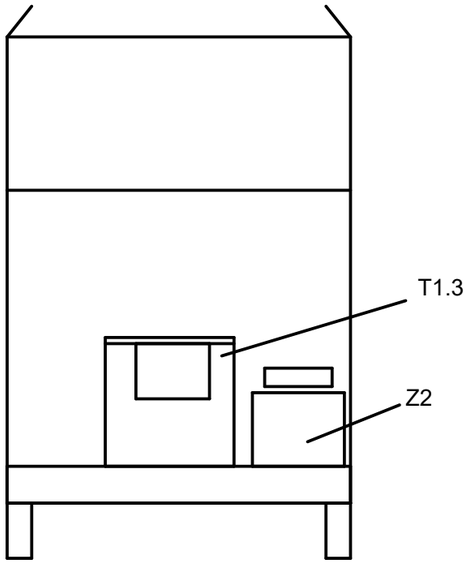

4,2/6kVA
Transformer

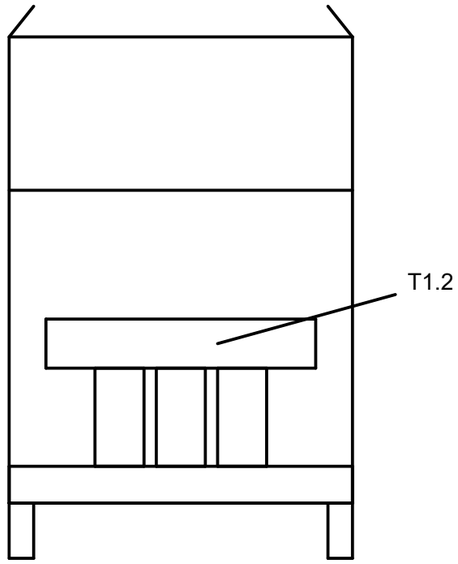

13kVA
Transformer

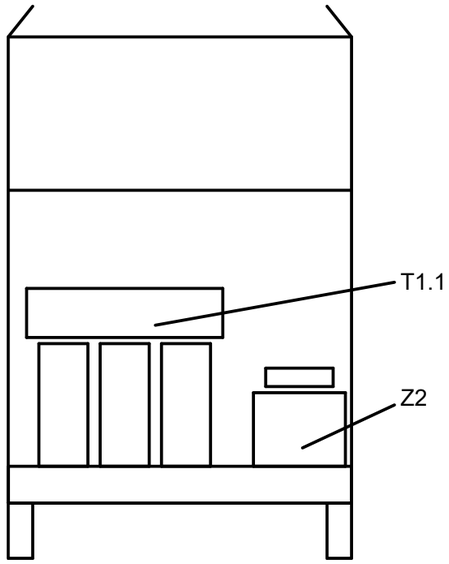

Latest revision:		ABB	Lab/Office: RA/RDP	IRC5 DESIGN Rel: 24:B Transformer and Reactor location Rear side of the Enclosure	Status: APPROVED	Plant: = Location: + Sublocation: +
Prepared by, date: A Hägglund	Approved by, date: S Hällgren 2024-03-18				Document no. 3HAC024480-011	Rev. Ind 18

We reserve all rights in this document and in the information contained therein. Reproduction, use or disclosure to third parties without express authority is strictly forbidden. © Copyright ABB

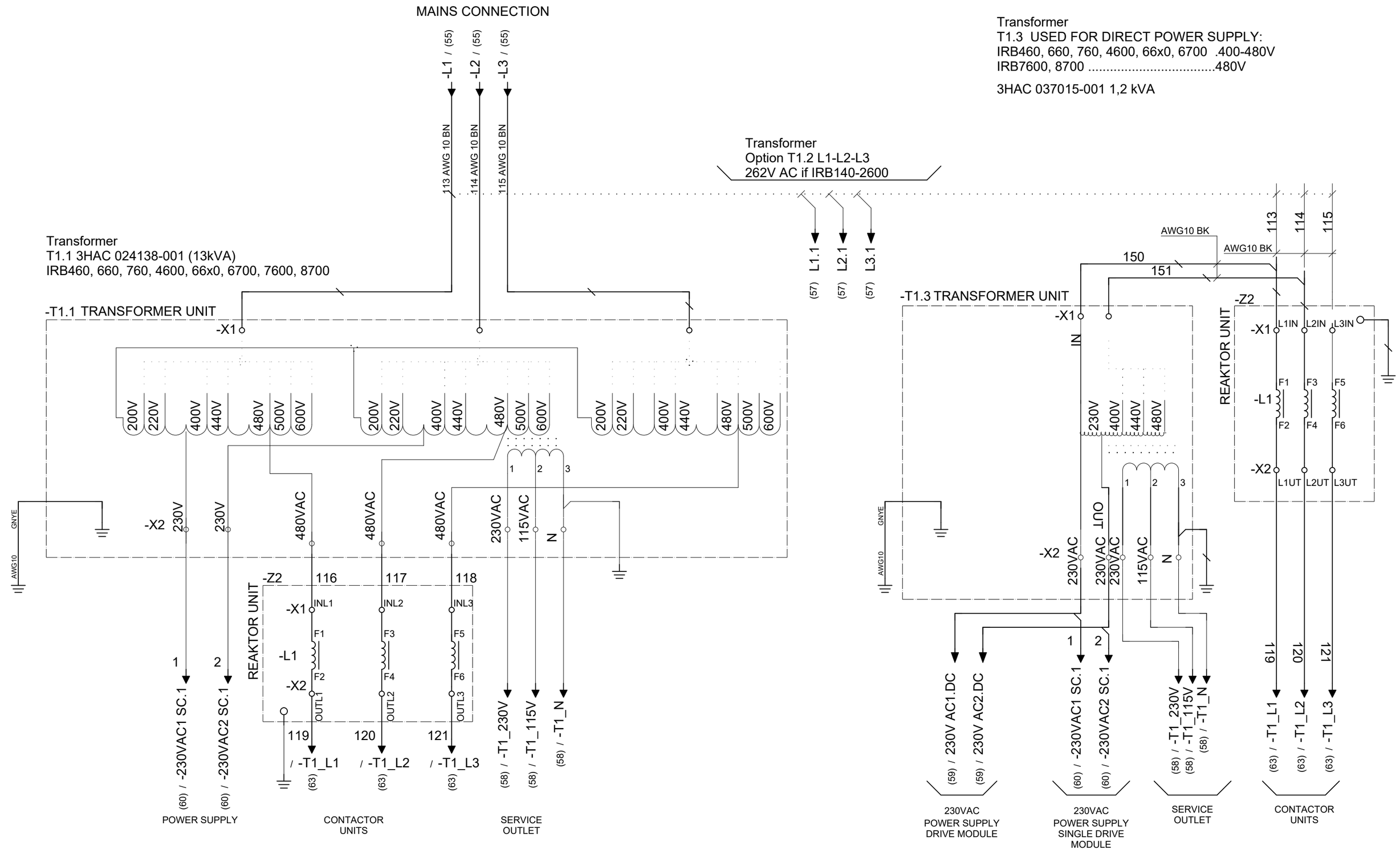

Latest revision:		Lab/Office: RA/RDP	IRC5 DESIGN Rel: 24:B TRANSFORMER UNIT 480V T1.1, T1.3, Z2, X10	Status: APPROVED	Plant: = Location: + Sublocation: +
				Document no. 3HAC024480-011	Rev. Ind 18
					Page 56 Next 57 Total 164
Prepared by, date: A Hägglund	Approved by, date: S Hällgren 2024-03-18				

We reserve all rights in this document and in the information contained therein. Reproduction, use or disclosure to third parties without express authority is strictly forbidden. © Copyright ABB

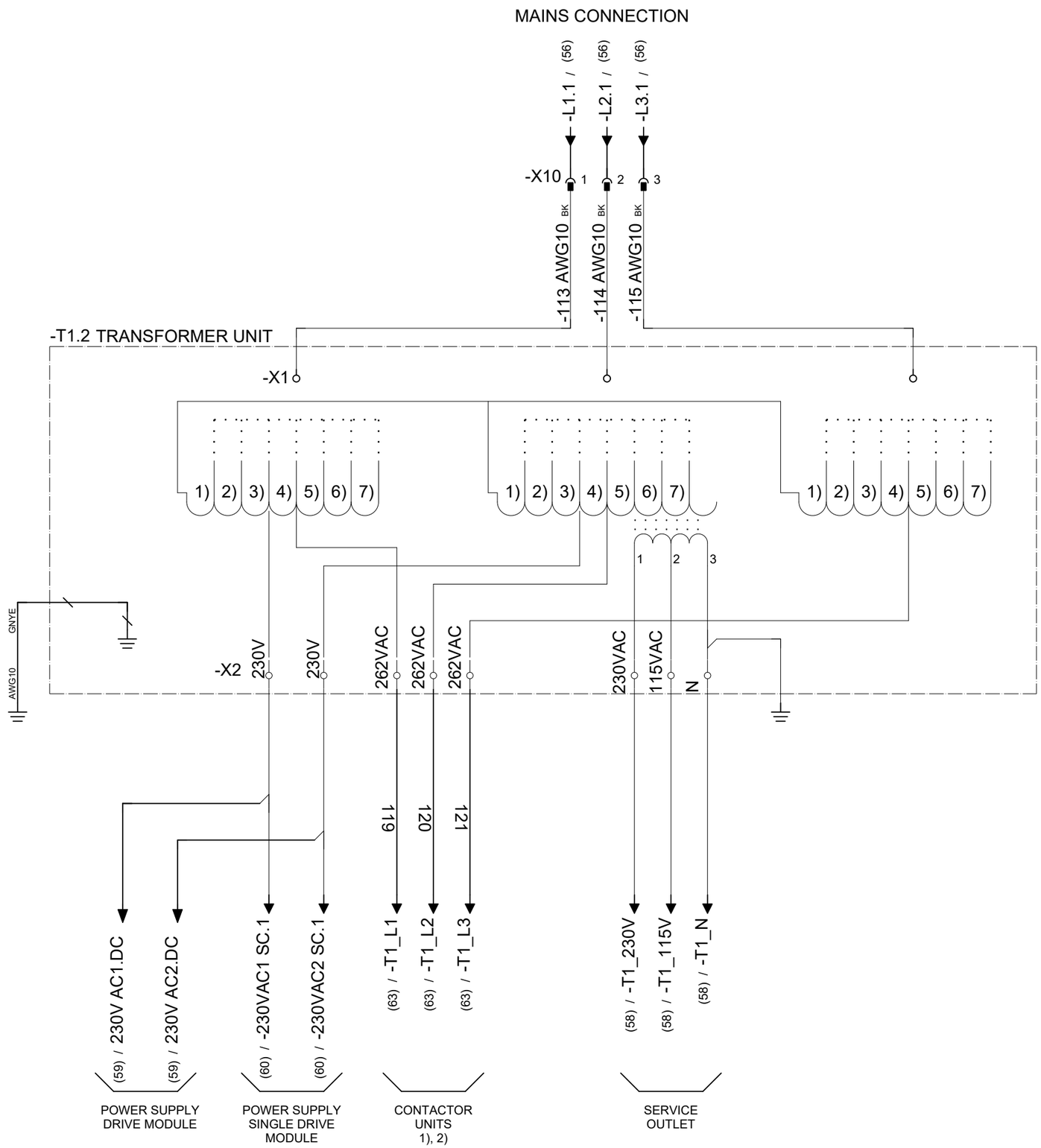

Option: Transformer T1.2 L1-L2-L3 = 262V
if IRB120 - 360, 1200, 14x0 - 44x0, 6400R

T1.2	(4,2kVA)	(4,2kVA)	(4,2kVA)	(6,0kVA)
Terminal	3HAC037016-001	3HAC037017-001	3HAC037018-001	3HAC024180--001
1)	200V	400V	440V	200V
2)	220V	—	480V	220V
3)	—	—	500V	400V
4)	—	—	600V	440V
5)	—	—	—	480V
6)	—	—	—	500V
7)	—	—	—	600V

Latest revision:		Lab/Office: RA/RDP	IRC5 DESIGN Rel: 24:B TRANSFORMER UNIT 262V T1.2, X10	Status: APPROVED	Plant: = Location: + Sublocation: +
Prepared by, date: A Hägglund	Approved by, date: S Hällgren 2024-03-18			Document no. 3HAC024480-011	Rev. Ind 18

We reserve all rights in this document and in the information contained therein. Reproduction, use or disclosure to third parties without express authority is strictly forbidden. © Copyright ABB

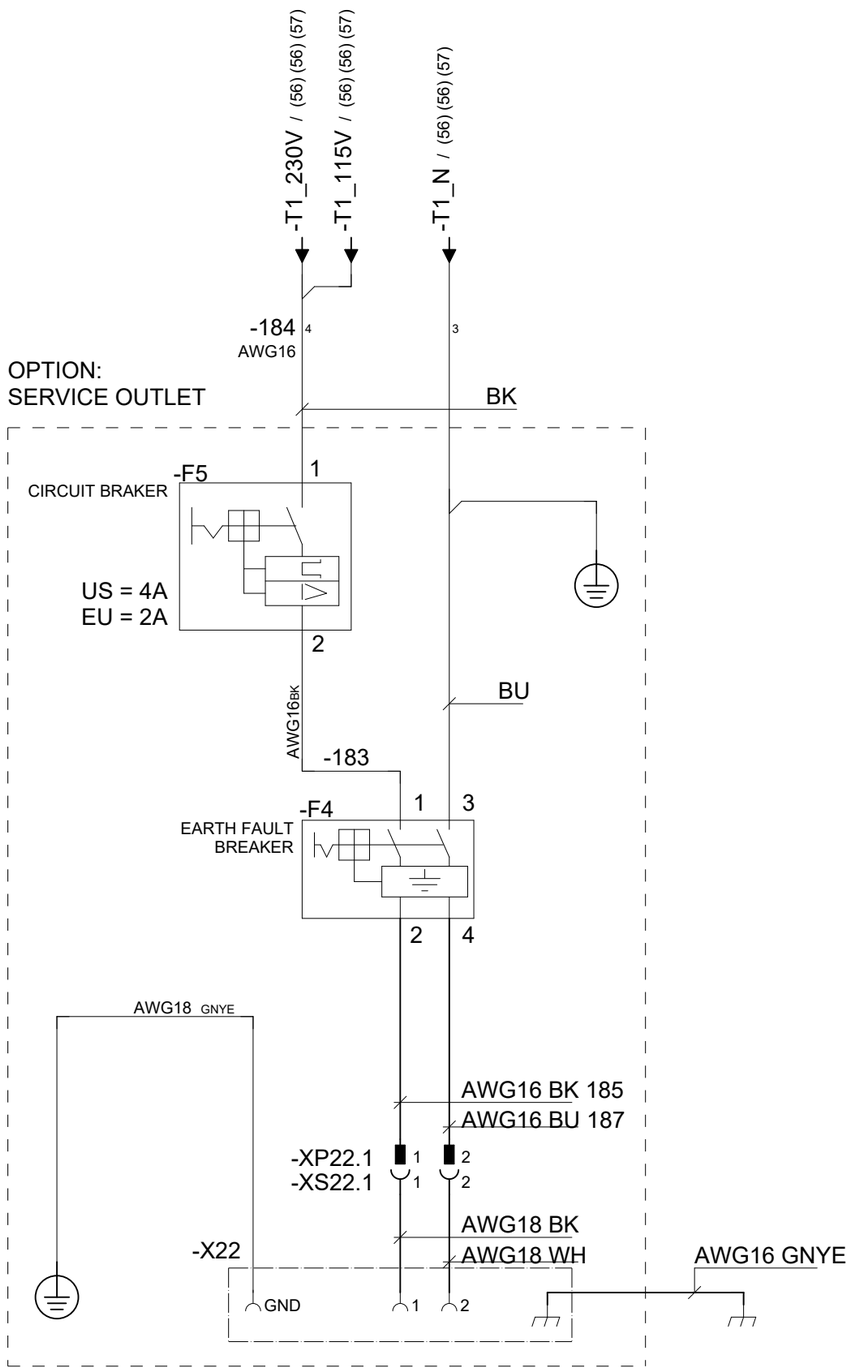

Latest revision:		Lab/Office: RA/RDP	IRC5 DESIGN Rel: 24:B OPTION : SERVICE OUTLET F4, F5, X22	Status: APPROVED	Plant: = Location: + Sublocation: +
Prepared by, date: A Hägglund	Approved by, date: S Hällgren 2024-03-18			Document no. 3HAC024480-011	Rev. Ind 18

We reserve all rights in this document and in the information contained therein. Reproduction, use or disclosure to third parties without express authority is strictly forbidden. © Copyright ABB

1) Option Power supply
for three external axes in Drive Module

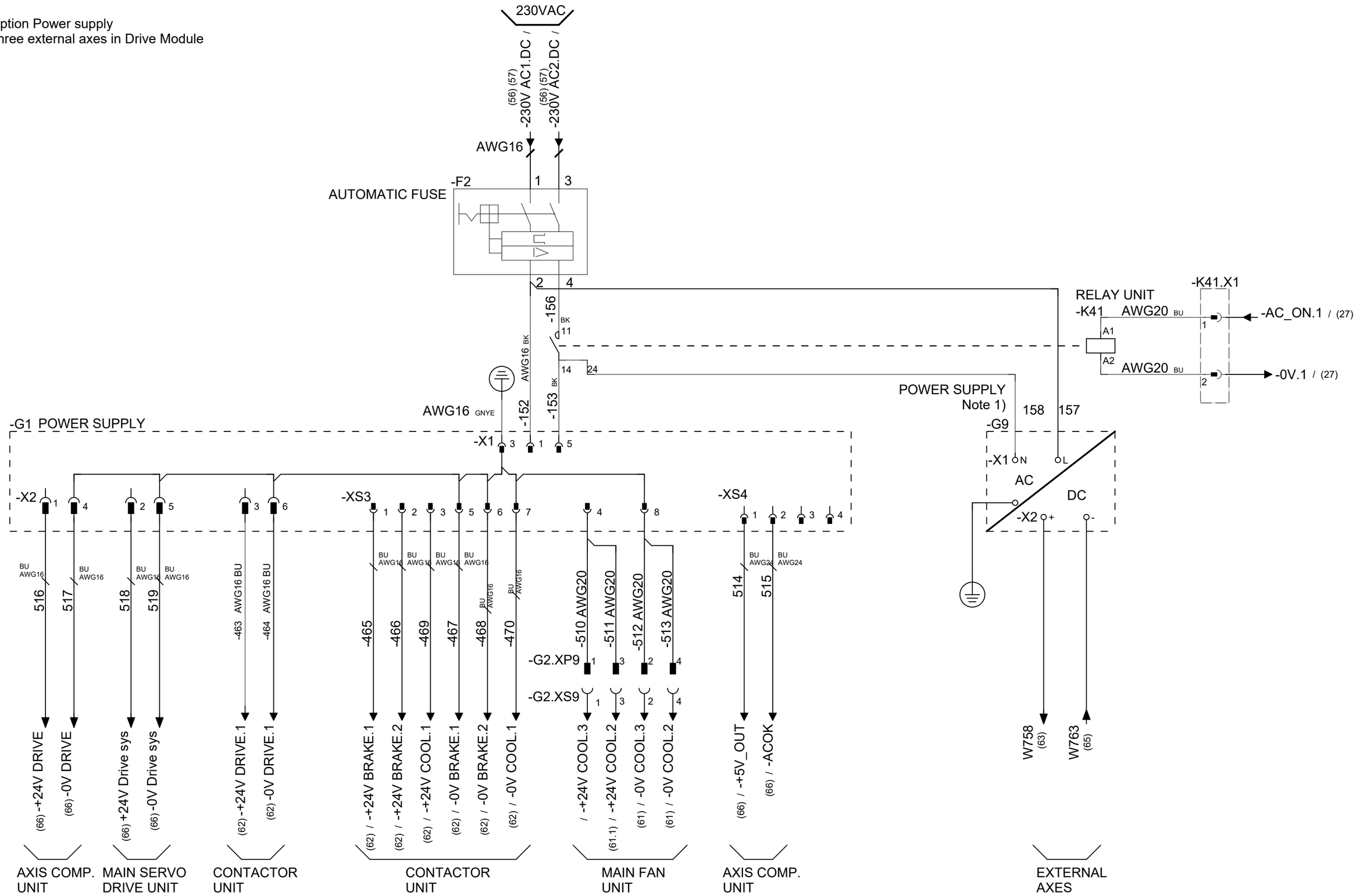

A21.X7 PANEL BOARD

Latest revision:		Lab/Office: RA/RDP	IRC5 DESIGN Rel: 24:B POWER SUPPLY DSQC 626 AND 627 FOR DRIVE MODULE F2, G1, G9, K41.X1	Status: APPROVED	Plant: = Location: + Sublocation: +
Prepared by, date: A Hägglund	Approved by, date: S Hällgren 2024-03-18			Document no. 3HAC024480-011	Rev. Ind 18

Harness:
3HAC047294-001 (xs49)

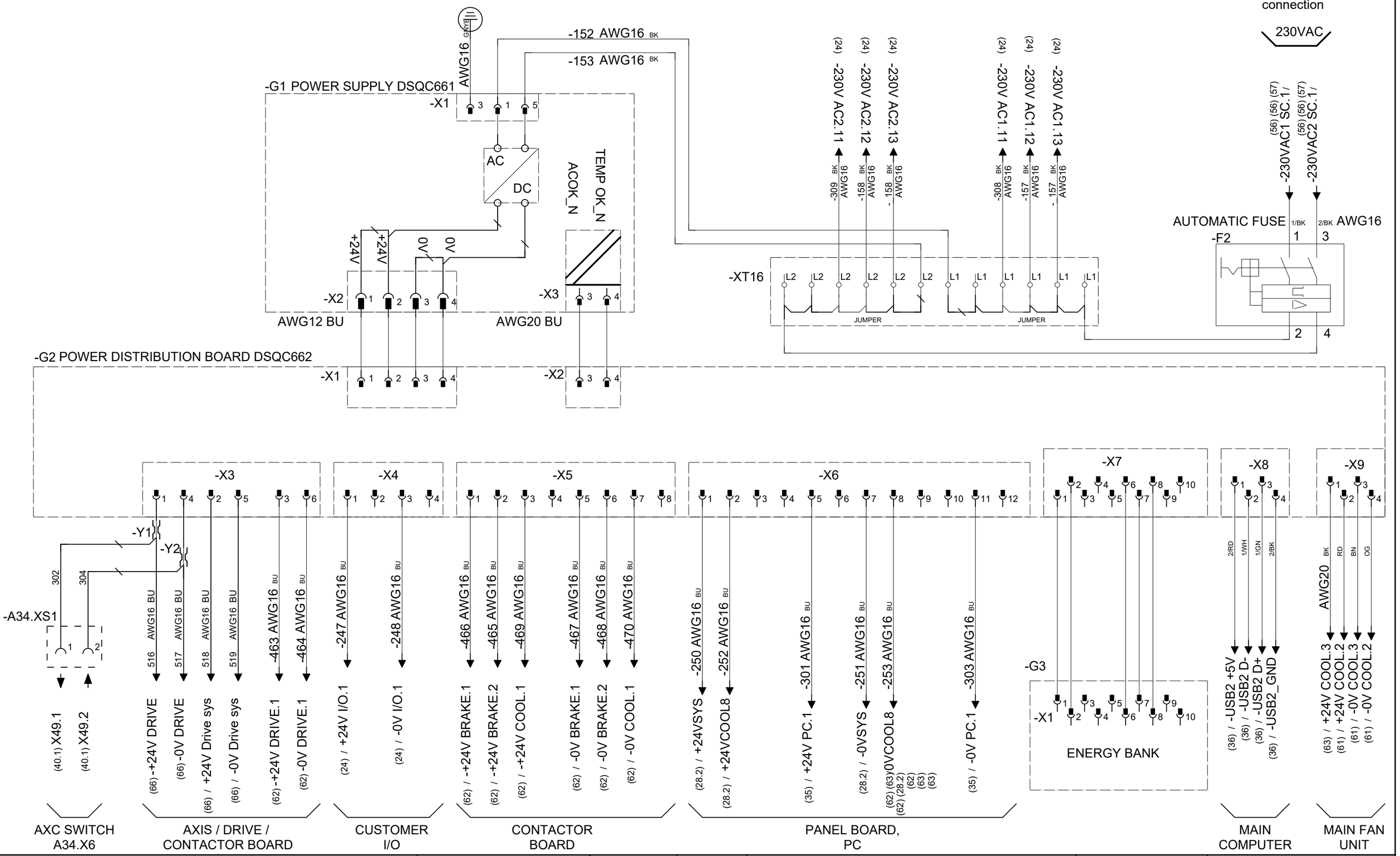

We reserve all rights in this document and in the information contained therein. Reproduction, use or disclosure to third parties without express authority is strictly forbidden. © Copyright ABB

Latest revision:	ABB	Lab/Office: RA/RDP	IRC5 DESIGN Rel: 24:B POWER SUPPLY DSQC 661 AND 662 G1, G2, G3, F2, XT16	Status: APPROVED	Plant: = Location: + Sublocation: +
				Document no. 3HAC024480-011	Rev. Ind 18
					Page 60 Next 61 Total 164
Prepared by, date: A Hägglund	Approved by, date: S Hällgren 2024-03-18				

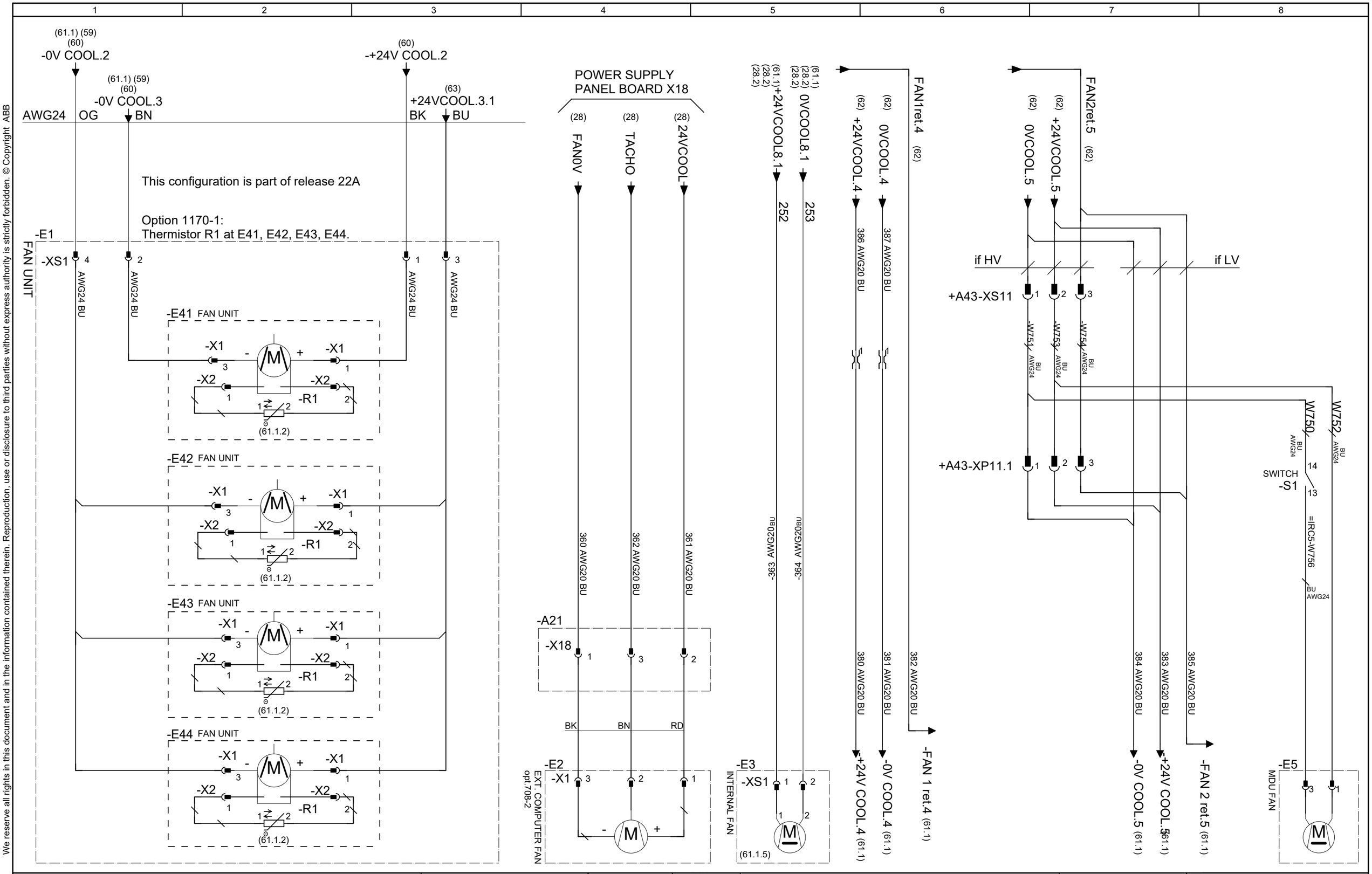

We reserve all rights in this document and in the information contained therein. Reproduction, use or disclosure to third parties without express authority is strictly forbidden. © Copyright ABB

Latest revision:	ABB	Lab/Office: RA/RDP	IRC5 DESIGN Rel: 24:B FAN UNIT E1, E2, E3, E5, A21, A43
Prepared by, date: A Hägglund	Approved by, date: S Hällgren 2024-03-18		

Status: APPROVED	Plant: =	
	Location: +	
	Sublocation: +	
Document no. 3HAC024480-011	Rev. Ind 18	Page 61
		Next 61.1
		Total 164

We reserve all rights in this document and in the information contained therein. Reproduction, use or disclosure to third parties without express authority is strictly forbidden. © Copyright ABB

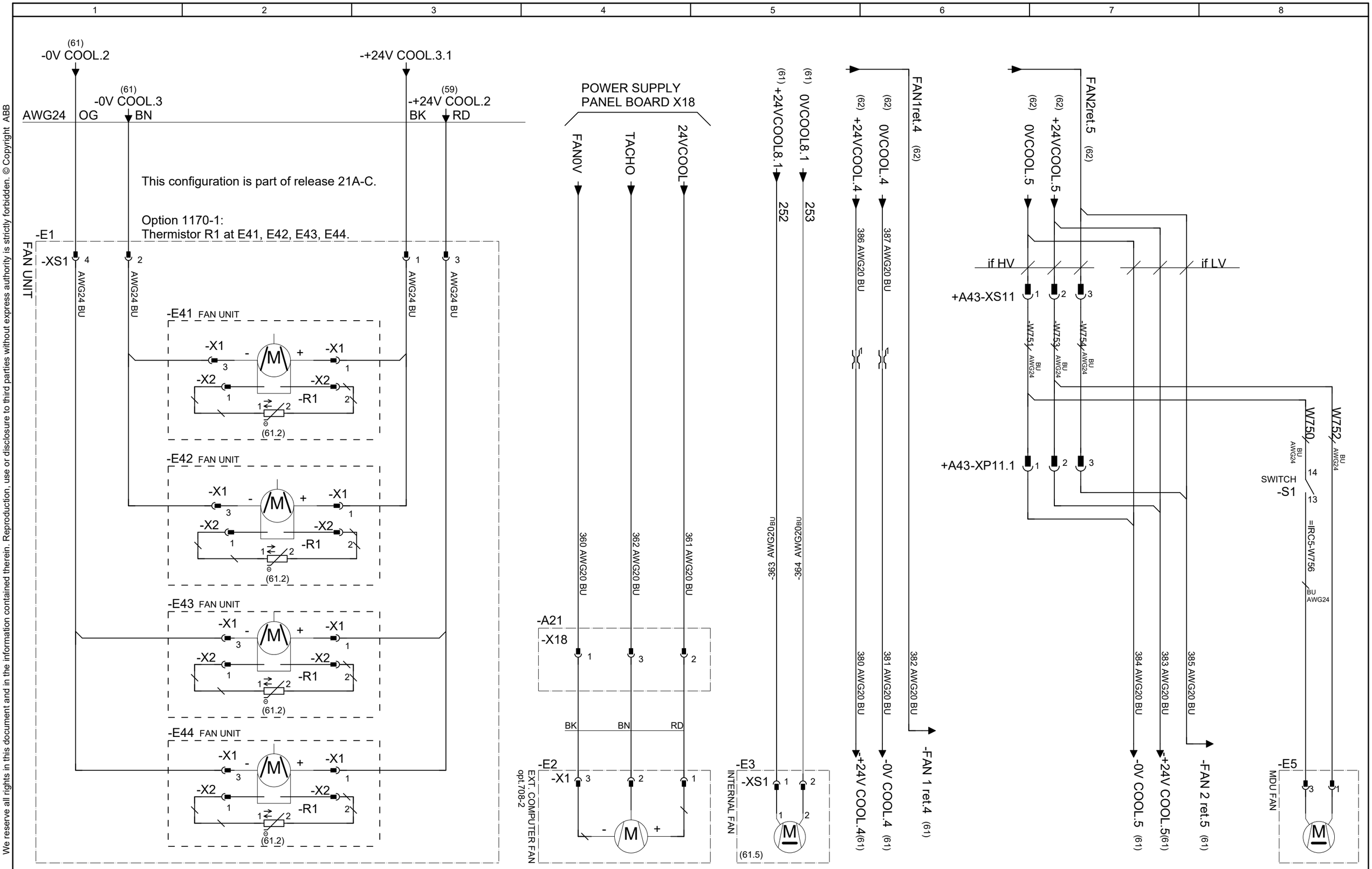

Latest revision:		Lab/Office: RA/RDP	IRC5 DESIGN Rel: 24:B FAN UNIT E1, E2, E3, E5, A21, A43 Release 21A-C	Status: APPROVED	Plant: = Location: + Sublocation: +
Prepared by, date: A Hägglund	Approved by, date: S Hällgren 2024-03-18			Document no. 3HAC024480-011	Rev. Ind 18

Page	61.1
Next	62
Total	164

We reserve all rights in this document and in the information contained therein. Reproduction, use or disclosure to third parties without express authority is strictly forbidden. © Copyright ABB

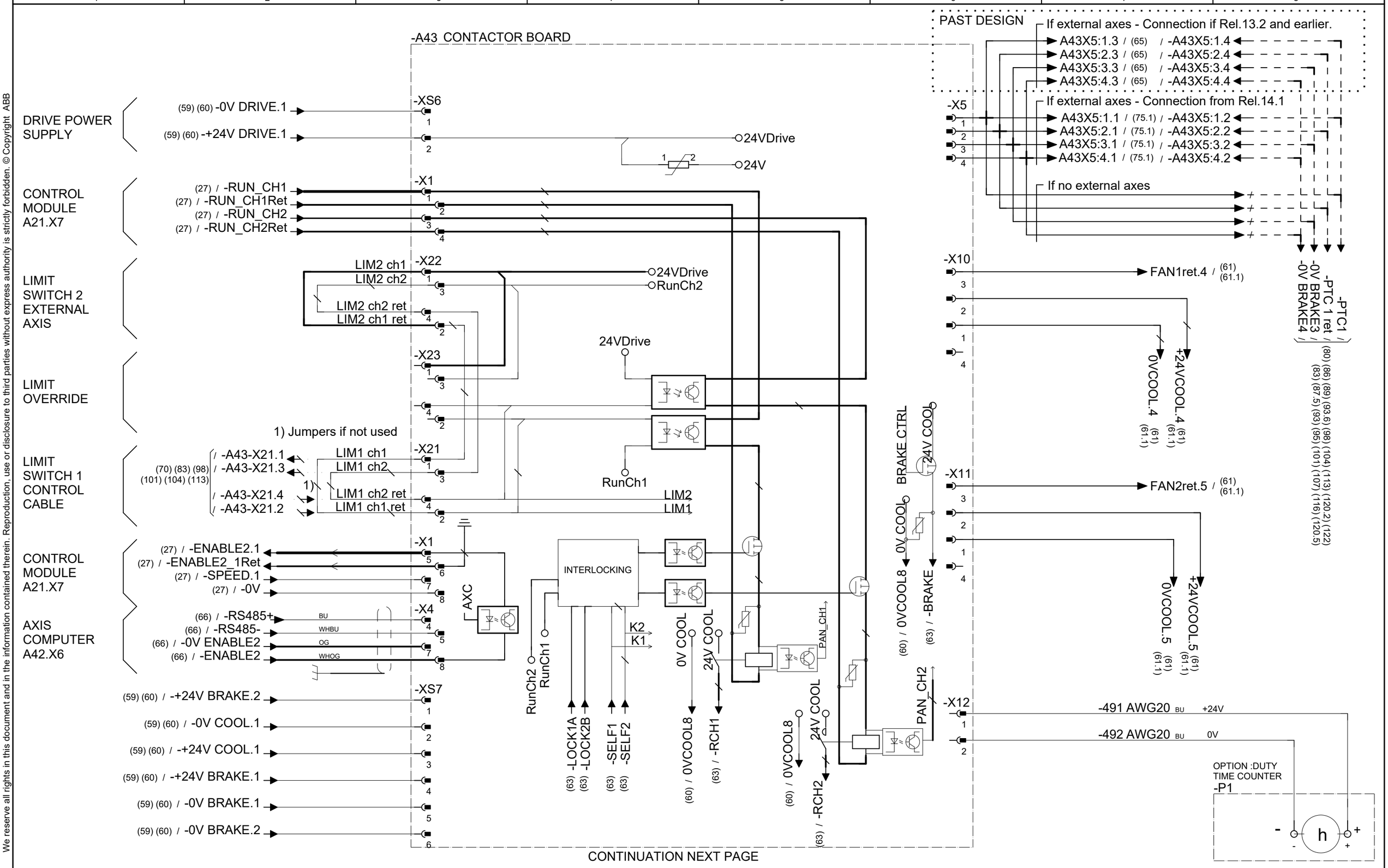

Latest revision:		Lab/Office: RA/RDP	IRC5 DESIGN Rel: 24:B CONTACTOR BOARD A43	Status: APPROVED	Plant: = Location: + Sublocation: +
Prepared by, date: A Hägglund	Approved by, date: S Hällgren 2024-03-18			Document no. 3HAC024480-011	Rev. Ind 18

We reserve all rights in this document and in the information contained therein. Reproduction, use or disclosure to third parties without express authority is strictly forbidden. © Copyright ABB

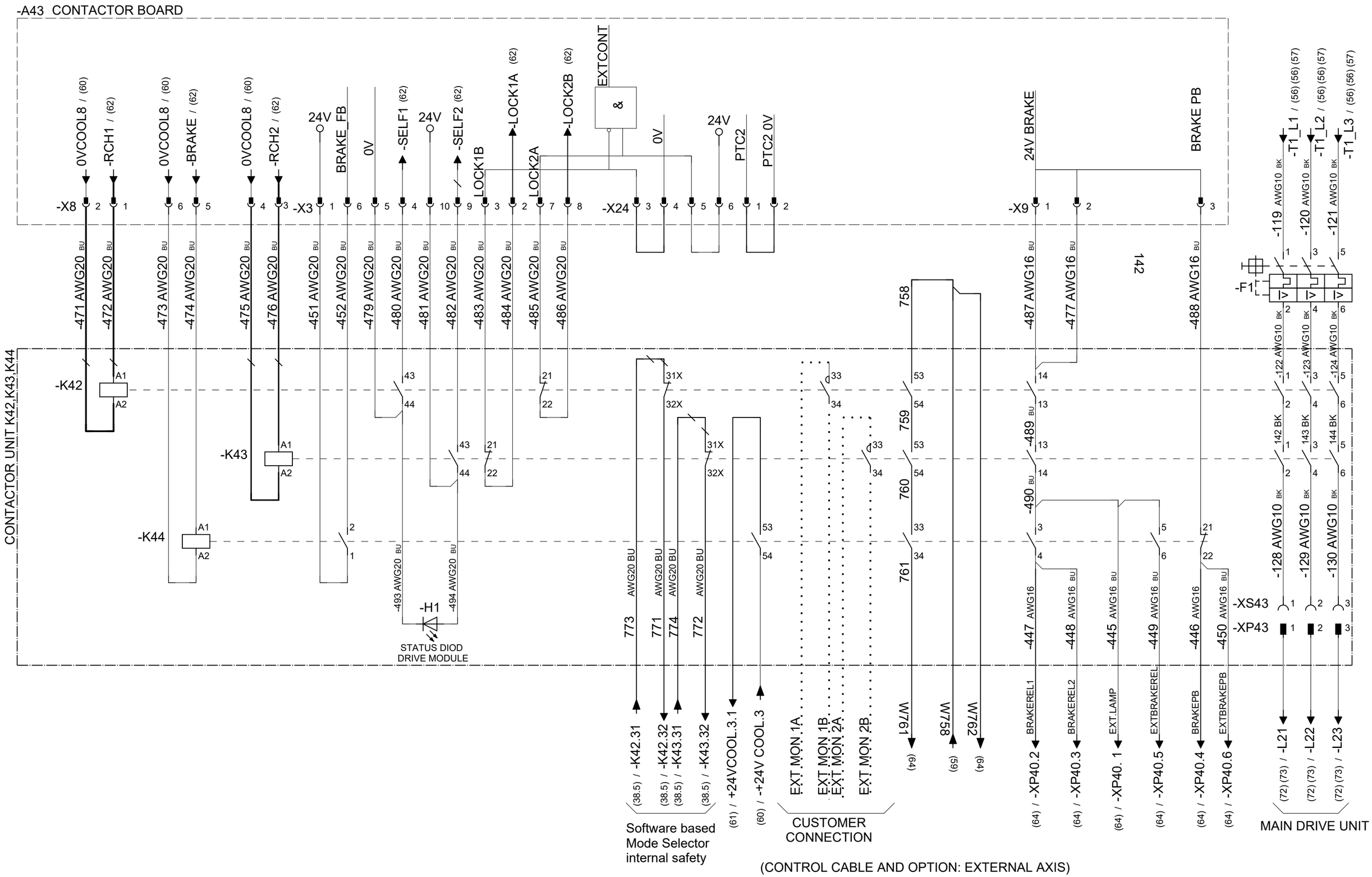

Latest revision:		Lab/Office: RA/RDP	IRC5 DESIGN Rel: 24:B CONTACTOR UNIT A43, K42, K43, K44	Status: APPROVED	Plant: = Location: + Sublocation: +
				Document no. 3HAC024480-011	Rev. Ind 18
					Page 63 Next 64 Total 164
Prepared by, date: A Hägglund	Approved by, date: S Hällgren 2024-03-18				

We reserve all rights in this document and in the information contained therein. Reproduction, use or disclosure to third parties without express authority is strictly forbidden. © Copyright ABB

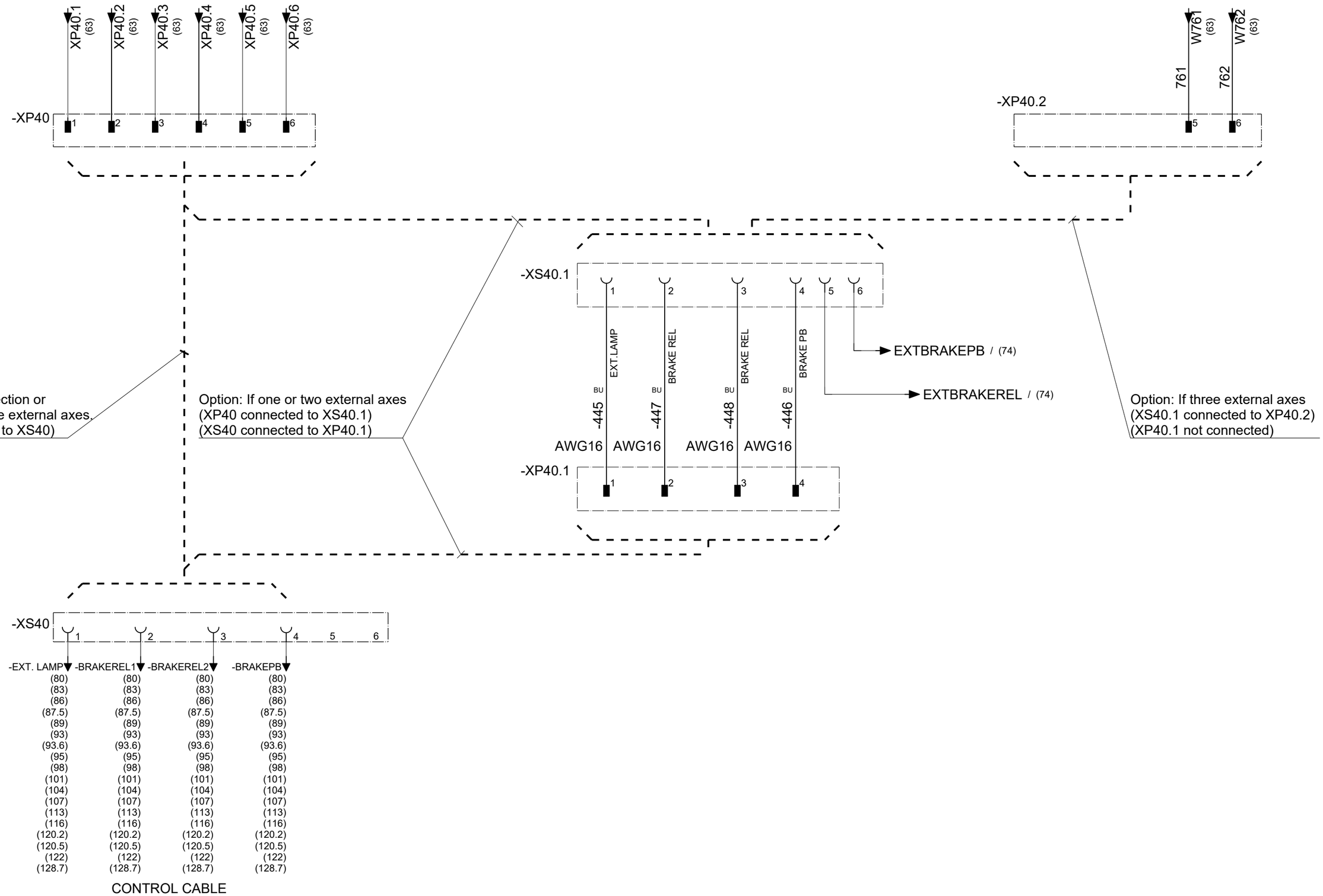

Latest revision:		Lab/Office: RA/RDP	IRC5 DESIGN Rel: 24:B CONTACTOR UNIT XS40, XP40 Only for release 13.2 and earlier	Status: APPROVED	Plant: = Location: + Sublocation: +
Prepared by, date: A Hägglund	Approved by, date: S Hällgren 2024-03-18			Document no. 3HAC024480-011	Rev. Ind 18

We reserve all rights in this document and in the information contained therein. Reproduction, use or disclosure to third parties without express authority is strictly forbidden. © Copyright ABB

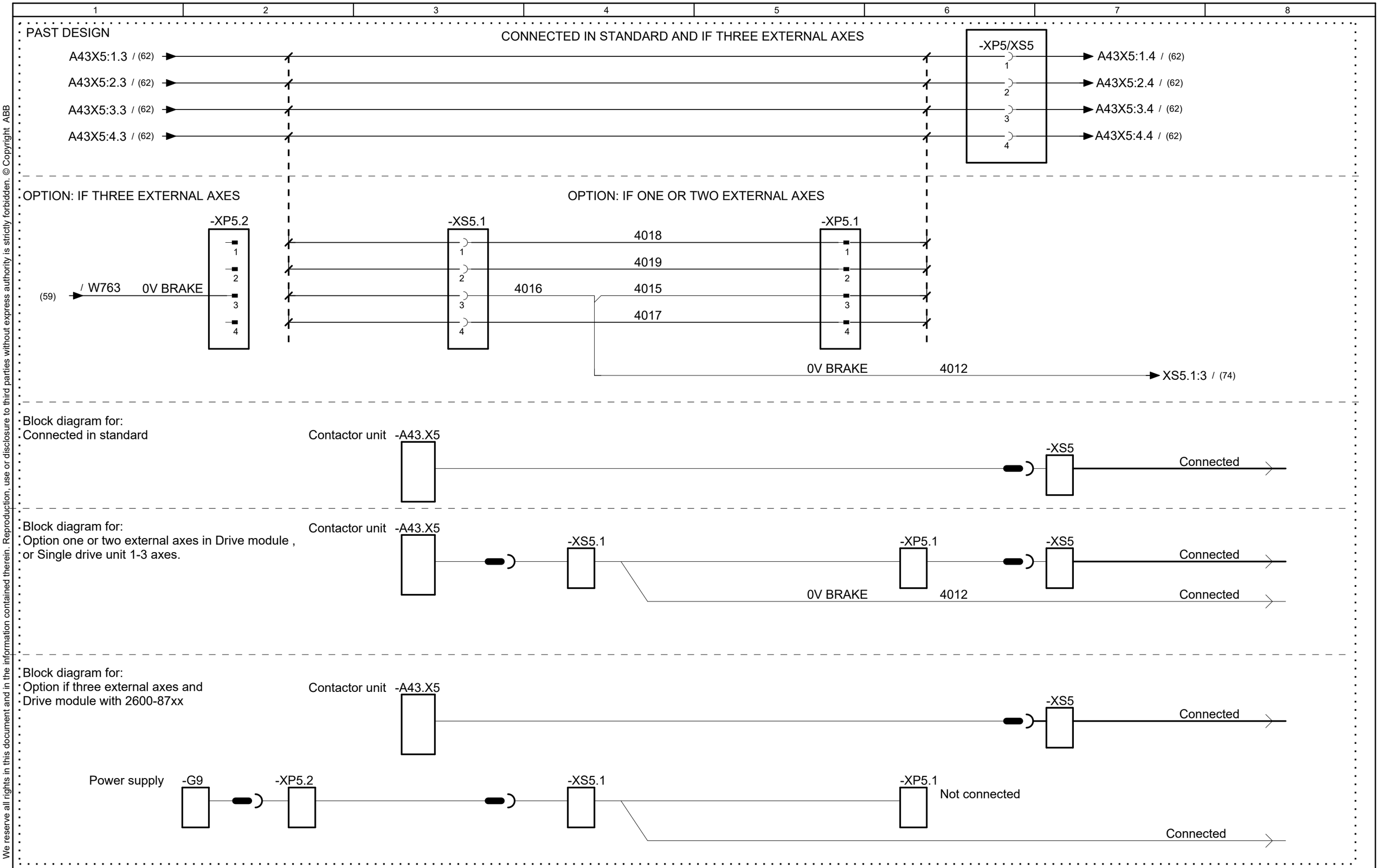

Latest revision:		ABB	Lab/Office: RA/RDP	IRC5 DESIGN Rel: 24:B CONTACTOR BOARD A43.X5, XS5, XP5 Connection for release 13.2 and earlier	Status: APPROVED	Plant: = Location: + Sublocation: +
Prepared by, date: A Hägglund	Approved by, date: S Hällgren 2024-03-18				Document no. 3HAC024480-011	Rev. Ind 18

We reserve all rights in this document and in the information contained therein. Reproduction, use or disclosure to third parties without express authority is strictly forbidden. © Copyright ABB

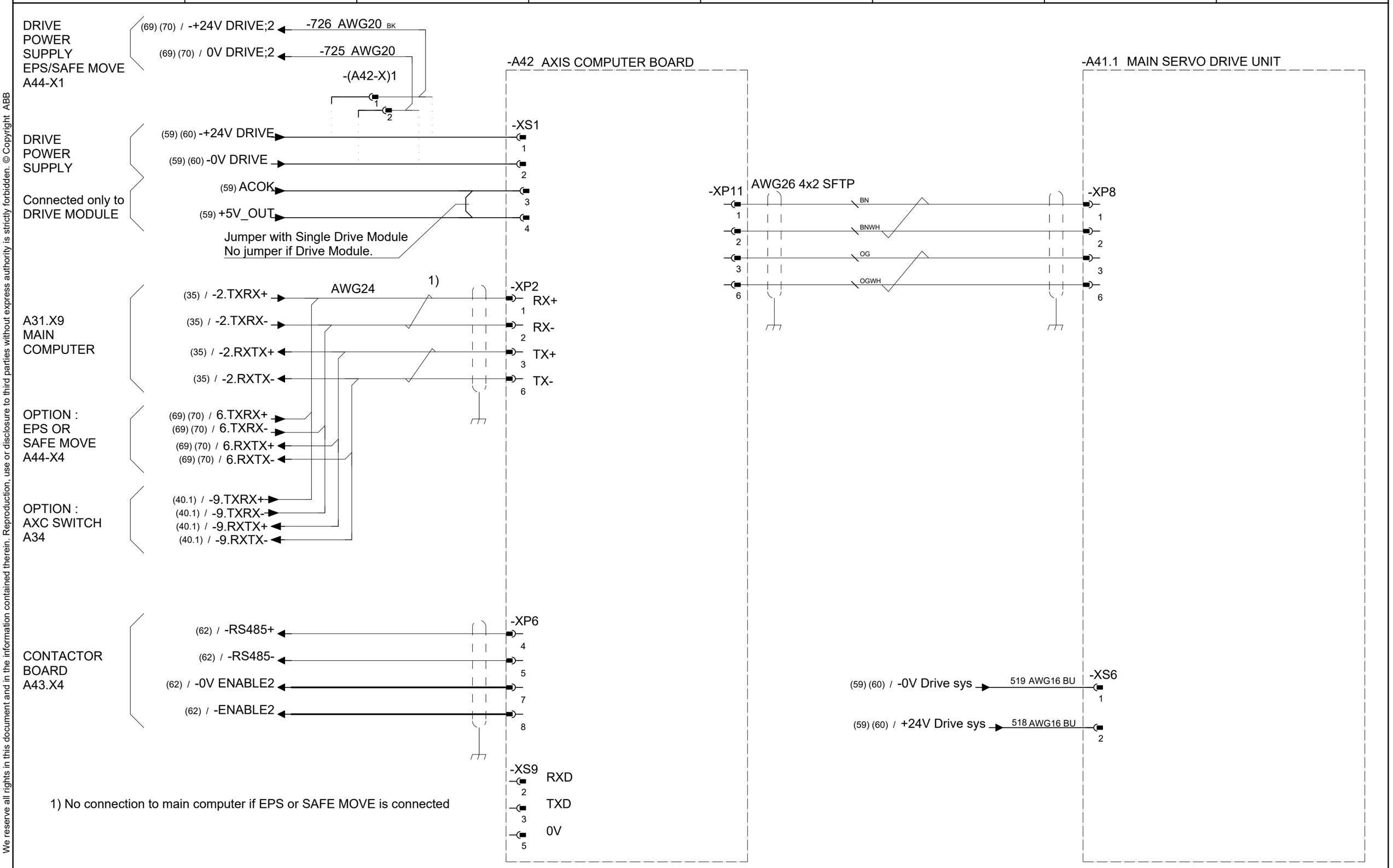

Latest revision:		Lab/Office: RA/RDP	IRC5 DESIGN Rel: 24:B AXIS COMPUTER UNIT A42, A41.1	Status: APPROVED	Plant: = Location: + Sublocation: +
Prepared by, date: A Hägglund	Approved by, date: S Hällgren 2024-03-18			Document no. 3HAC024480-011	Rev. Ind 18

We reserve all rights in this document and in the information contained therein. Reproduction, use or disclosure to third parties without express authority is strictly forbidden. © Copyright ABB

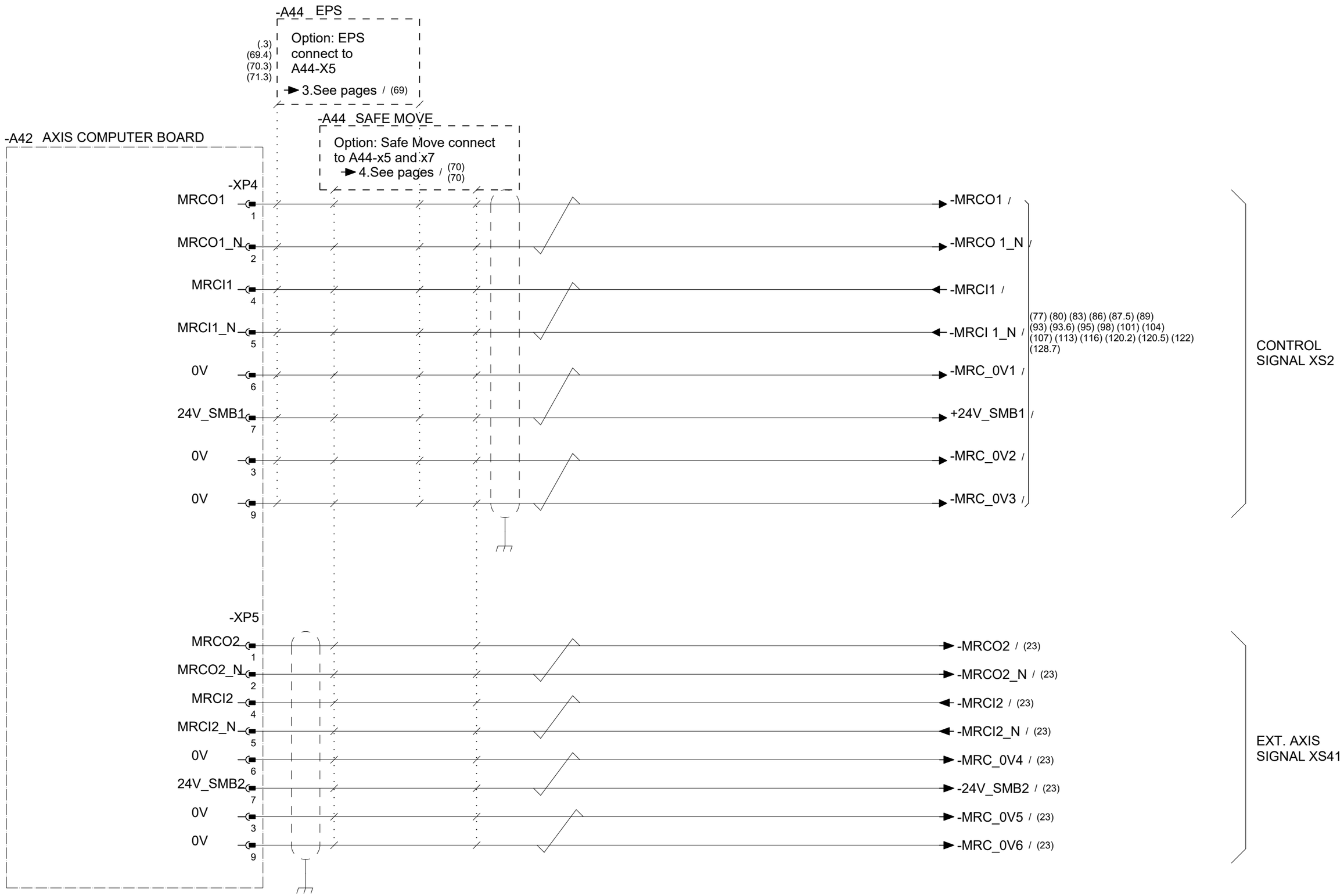

Latest revision:		Lab/Office: RA/RDP	IRC5 DESIGN Rel: 24:B AXIS COMPUTER UNIT A42, A44	Status: APPROVED	Plant: = Location: + Sublocation: +
Prepared by, date: A Hägglund	Approved by, date: S Hällgren 2024-03-18			Document no. 3HAC024480-011	Rev. Ind 18

We reserve all rights in this document and in the information contained therein. Reproduction, use or disclosure to third parties without express authority is strictly forbidden. © Copyright ABB

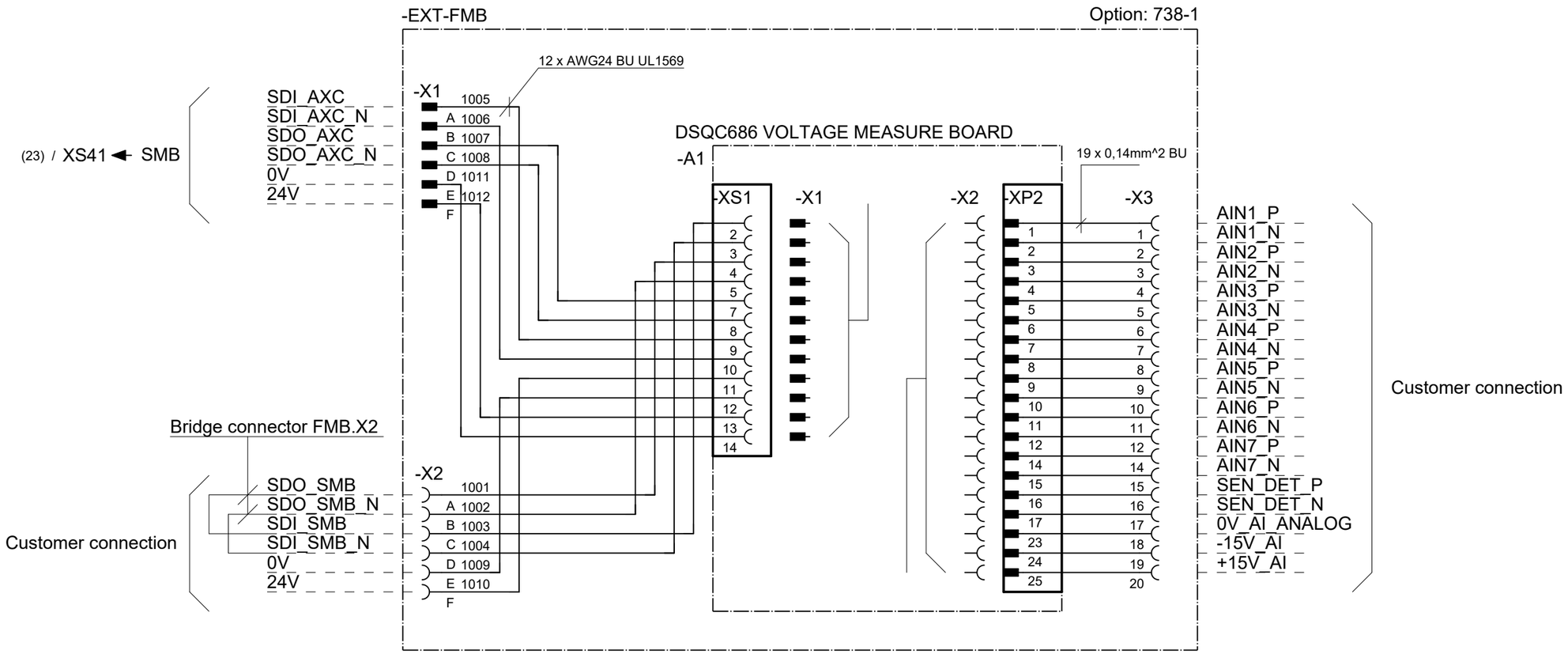

Latest revision:		Lab/Office: RA/RDP	IRC5 DESIGN Rel: 24:B FORCE MEASUREMENT BOX	Status: APPROVED	Plant: = Location: + Sublocation: +
Prepared by, date: A Hägglund	Approved by, date: S Hällgren 2024-03-18			Document no. 3HAC024480-011	Rev. Ind 18

We reserve all rights in this document and in the information contained therein. Reproduction, use or disclosure to third parties without express authority is strictly forbidden. © Copyright ABB

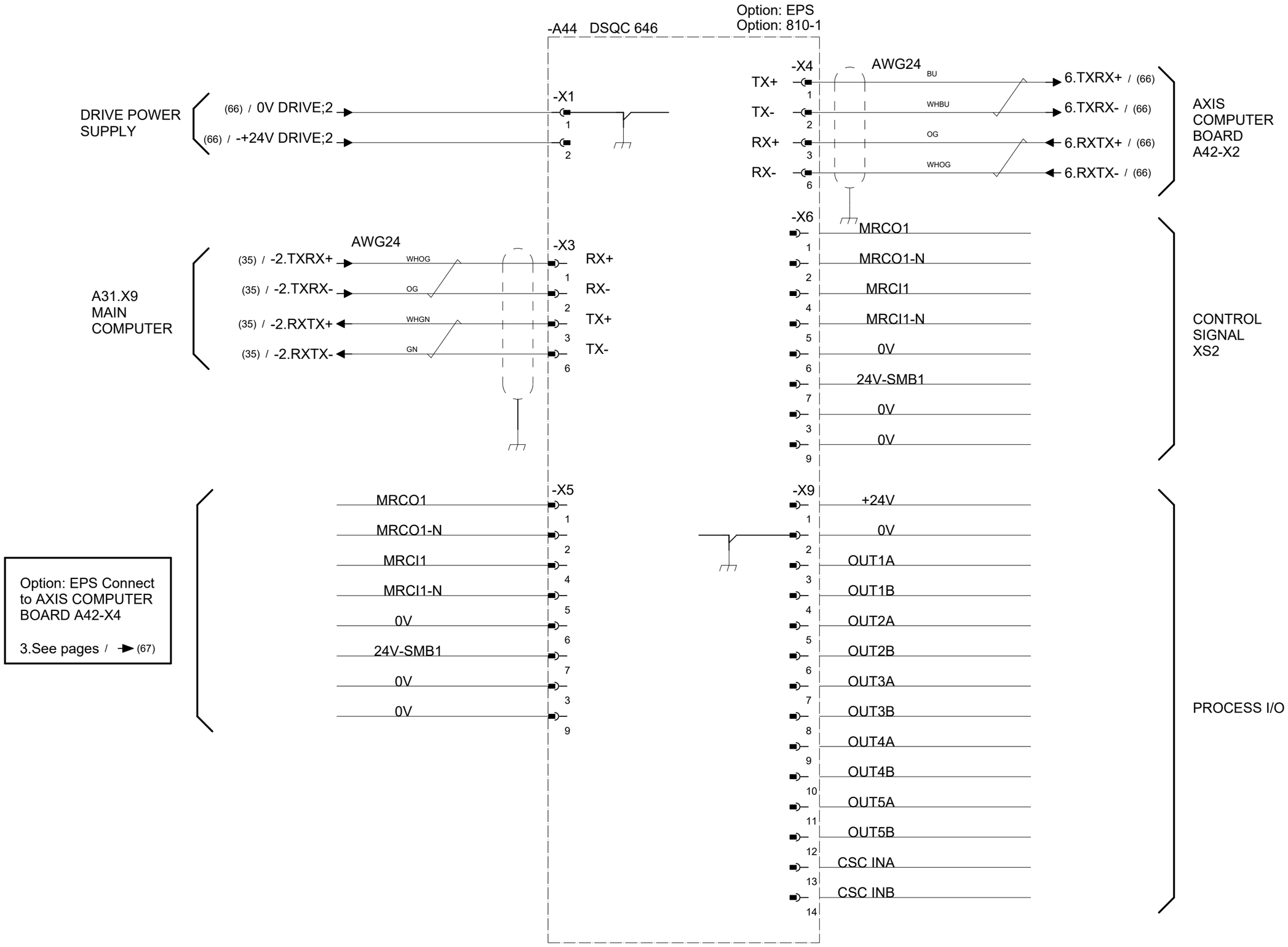

Latest revision:		ABB	Lab/Office: RA/RDP	IRC5 DESIGN Rel: 24:B EPS A44, DSQC646	Status: APPROVED	Plant: = Location: + Sublocation: +
Prepared by, date: A Hägglund	Approved by, date: S Hällgren 2024-03-18				Document no. 3HAC024480-011	Rev. Ind 18

We reserve all rights in this document and in the information contained therein. Reproduction, use or disclosure to third parties without express authority is strictly forbidden. © Copyright ABB

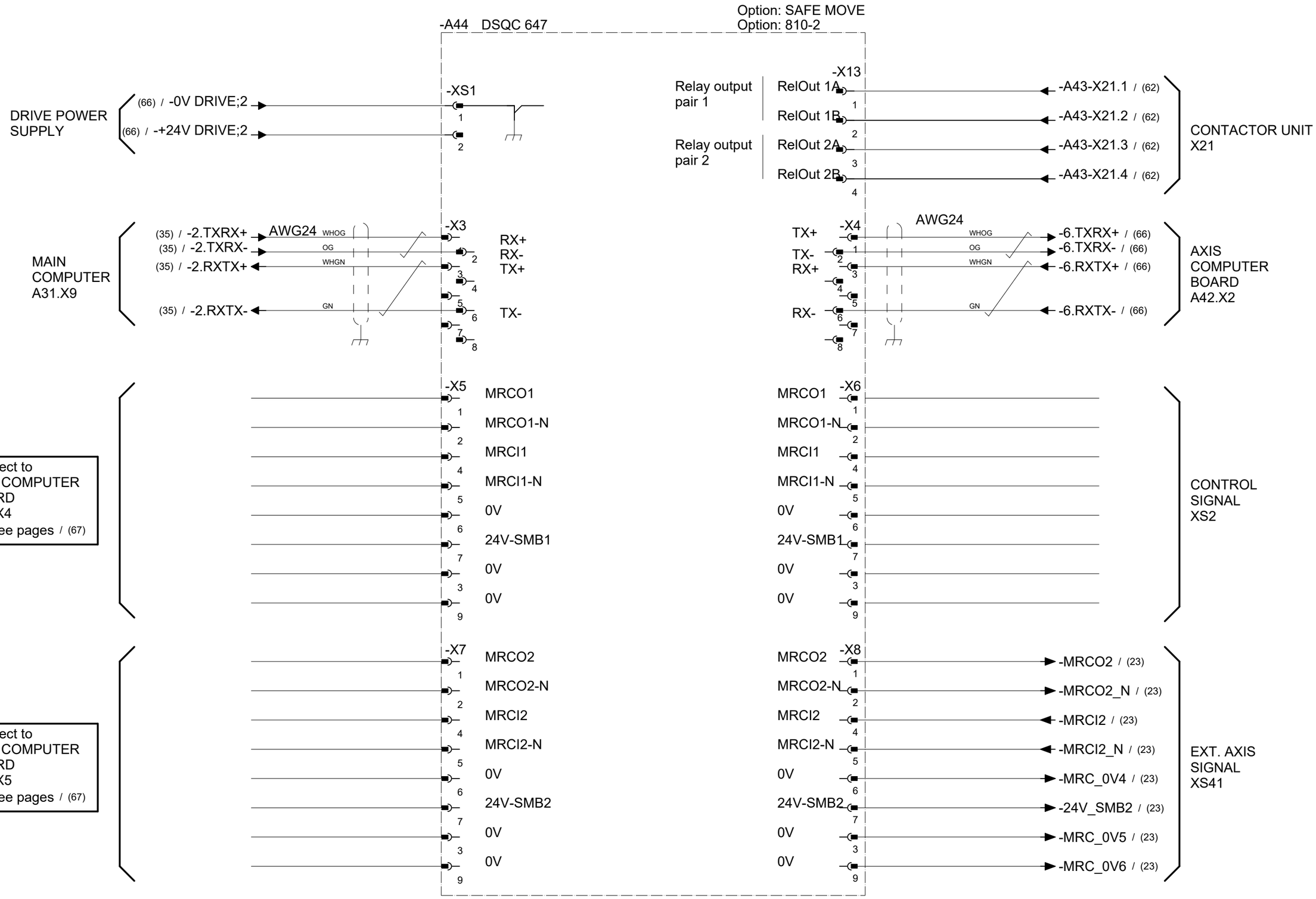

Latest revision:		Lab/Office: RA/RDP	IRC5 DESIGN Rel: 24:B SAFE MOVE A44, DSQC647	Status: APPROVED	Plant: = Location: + Sublocation: +
Prepared by, date: A Hägglund	Approved by, date: S Hällgren 2024-03-18			Document no. 3HAC024480-011	Rev. Ind 18

We reserve all rights in this document and in the information contained therein. Reproduction, use or disclosure to third parties without express authority is strictly forbidden. © Copyright ABB

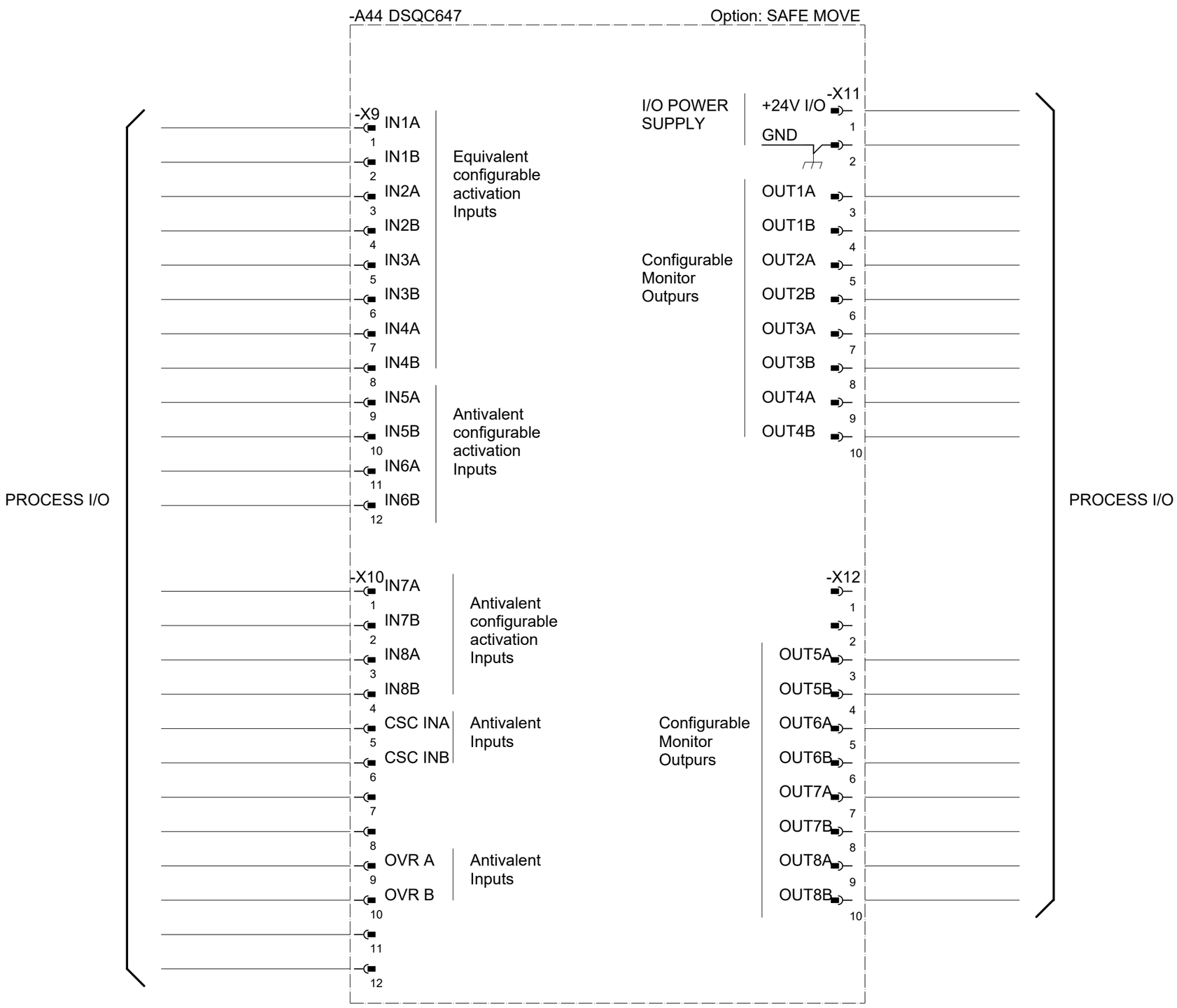

Latest revision:		ABB	Lab/Office: RA/RDP	IRC5 DESIGN Rel: 24:B SAFE MOVE A44, DSQC647	Status: APPROVED	Plant: = Location: + Sublocation: +
Prepared by, date: A Hägglund	Approved by, date: S Hällgren 2024-03-18				Document no. 3HAC024480-011	Rev. Ind 18

We reserve all rights in this document and in the information contained therein. Reproduction, use or disclosure to third parties without express authority is strictly forbidden. © Copyright ABB

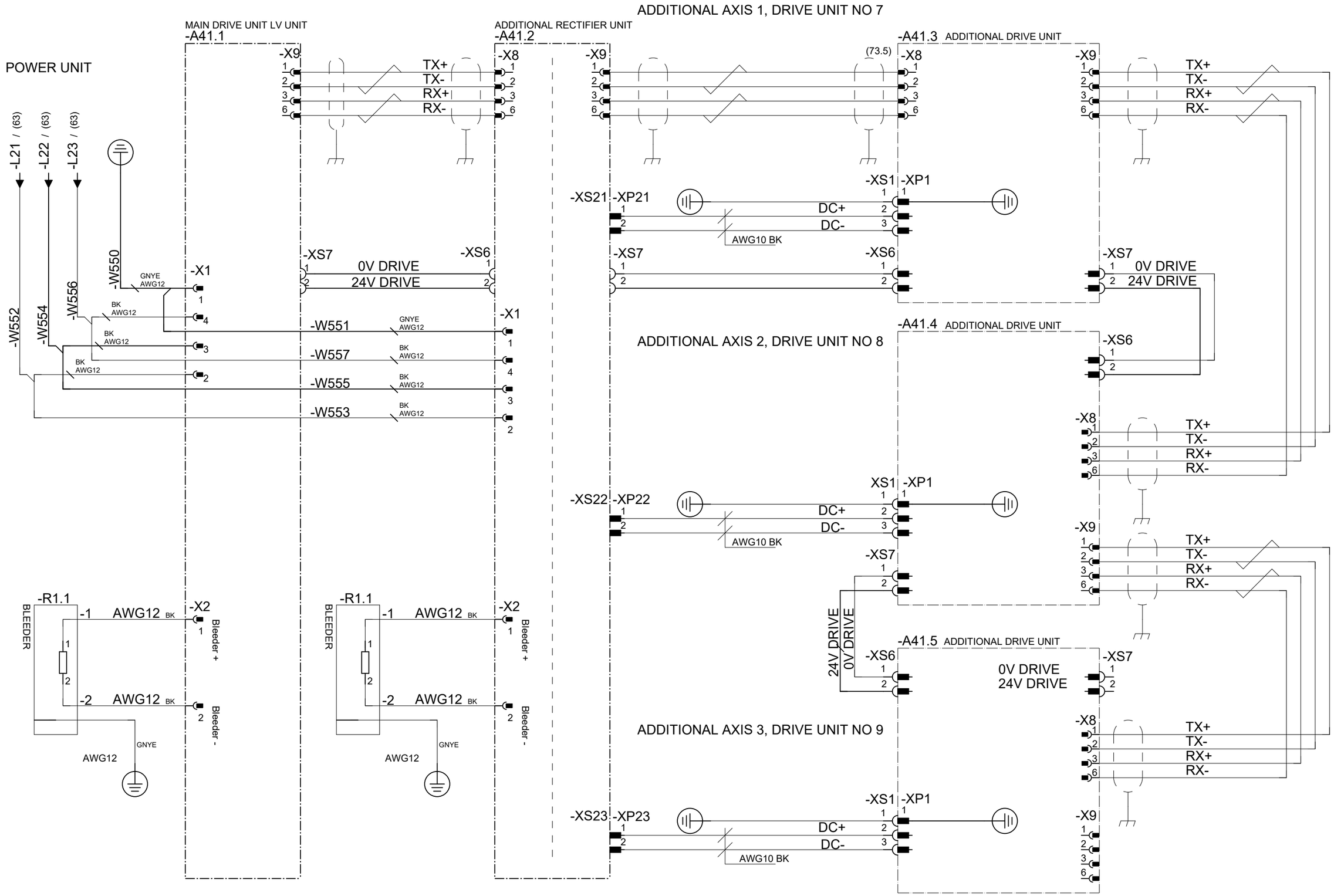

Latest revision:		Lab/Office: RA/RDP	IRC5 DESIGN Rel: 24:B MAIN DRIVE UNIT and ADDITIONAL AXIS 1-3 for LV A41.1 ,2 ,3 ,4 ,5	Status: APPROVED	Plant: = Location: + Sublocation: +
Prepared by, date: A Hägglund	Approved by, date: S Hällgren 2024-03-18			Document no. 3HAC024480-011	Rev. Ind 18
					Page 72 Next 73 Total 164

We reserve all rights in this document and in the information contained therein. Reproduction, use or disclosure to third parties without express authority is strictly forbidden. © Copyright ABB

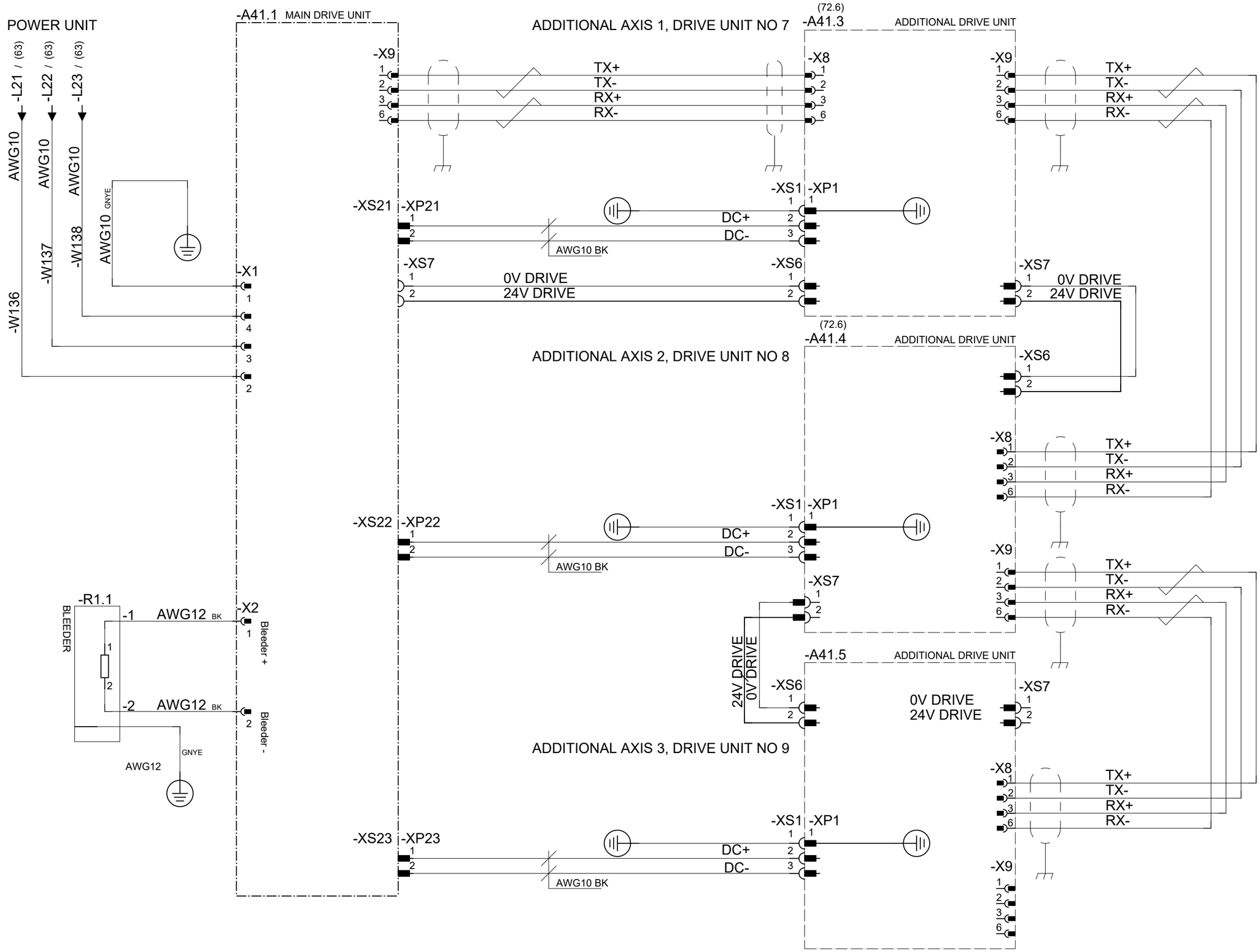

Latest revision:		ABB	Lab/Office: RA/RDP	IRC5 DESIGN Rel: 24:B MAIN DRIVE UNIT and ADDITIONAL AXIS 1-3 for HV A41.1, 3, 4, 5	Status: APPROVED	Plant: = Location: + Sublocation: +
Prepared by, date: A Hägglund	Approved by, date: S Hällgren 2024-03-18				Document no. 3HAC024480-011	Rev. Ind 18

Page 73 | Next 74 | Total 164

We reserve all rights in this document and in the information contained therein. Reproduction, use or disclosure to third parties without express authority is strictly forbidden. © Copyright ABB

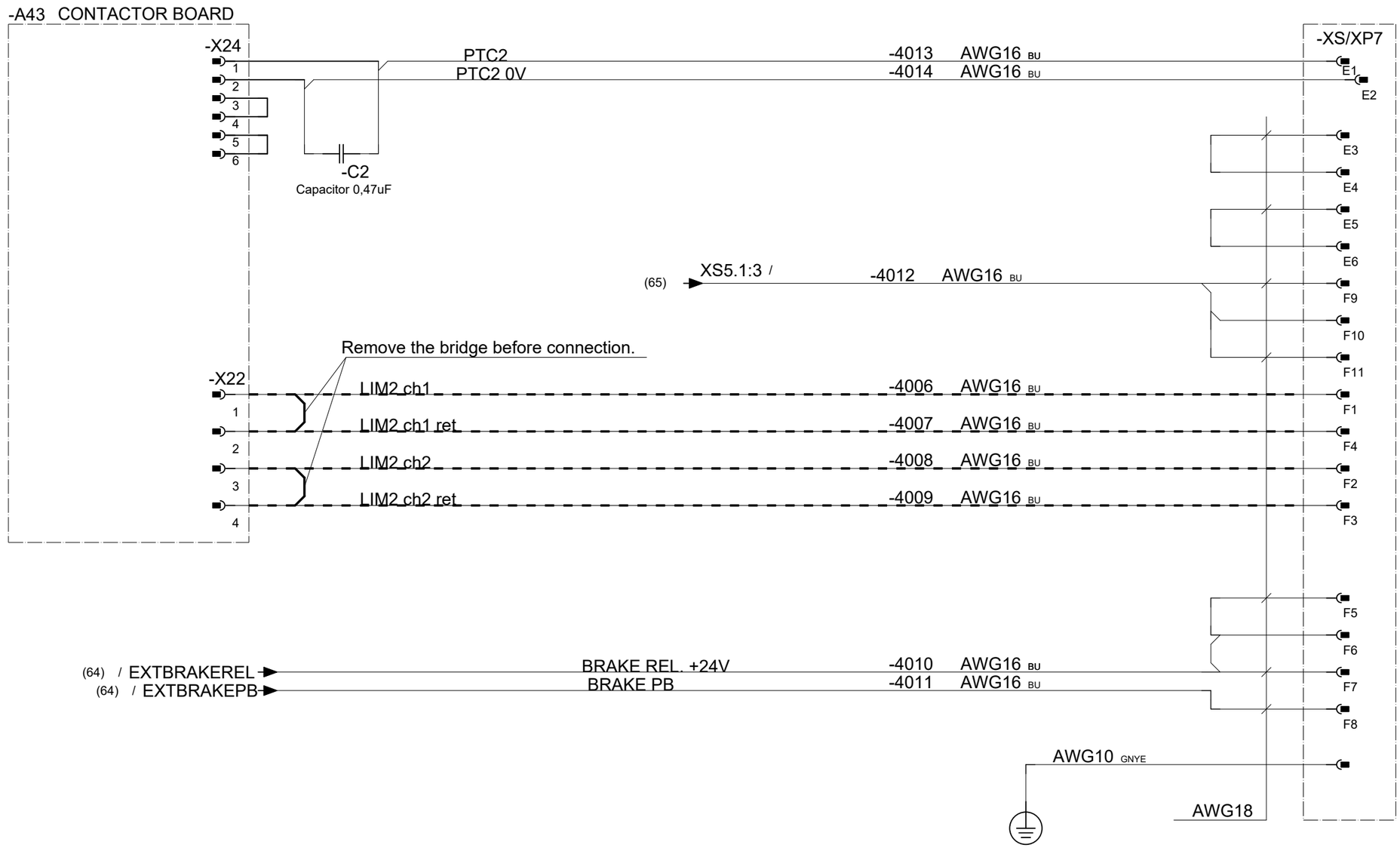

Latest revision:		ABB	Lab/Office: RA/RDP	IRC5 DESIGN Rel: 24:B EXTERNAL AXIS A43, XS/XP7 Only for release 13.2 and earlier	Status: APPROVED	Plant: = Location: + Sublocation: +
Prepared by, date: A Hägglund	Approved by, date: S Hällgren 2024-03-18				Document no. 3HAC024480-011	Rev. Ind 18

We reserve all rights in this document and in the information contained therein. Reproduction, use or disclosure to third parties without express authority is strictly forbidden. © Copyright ABB

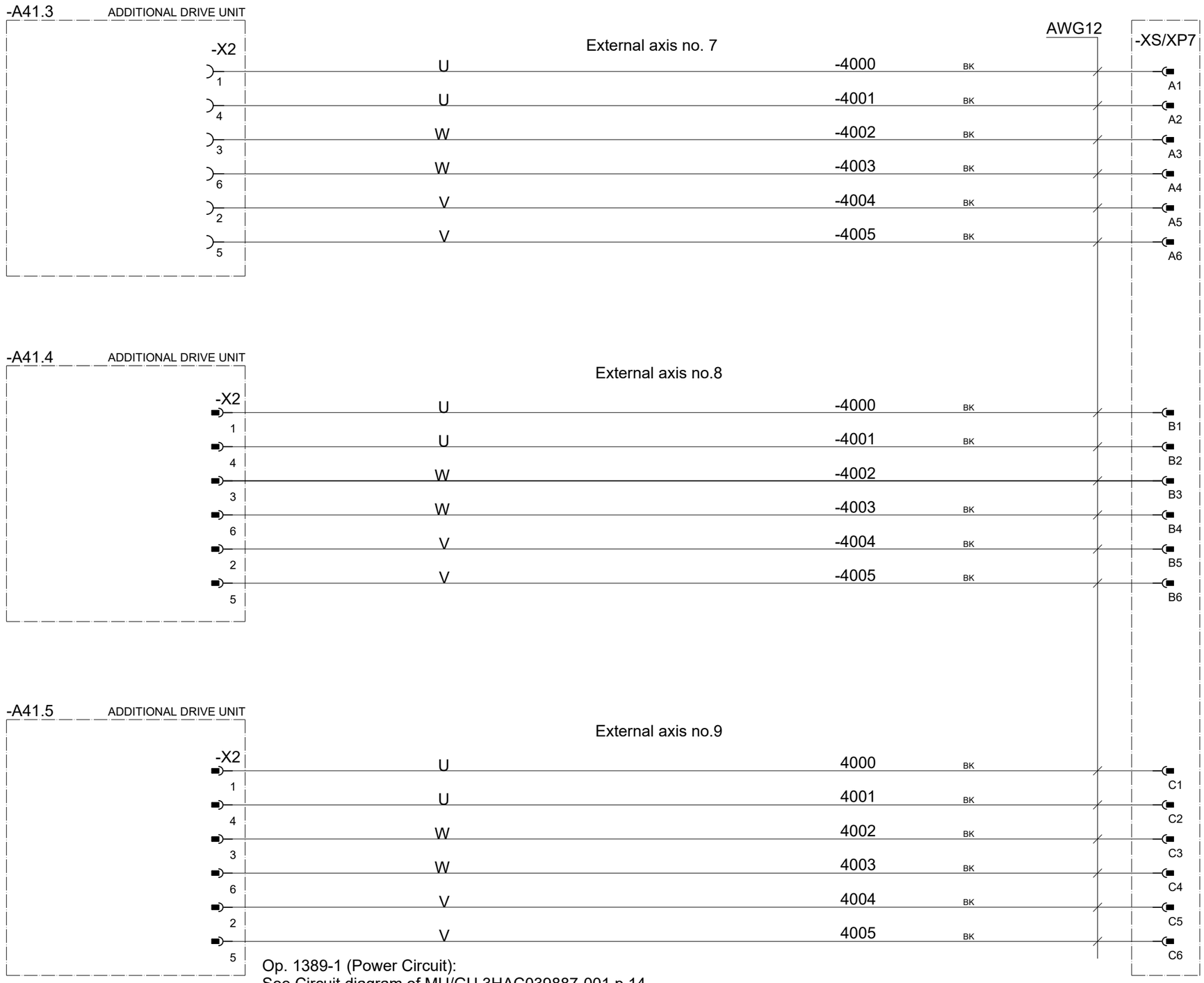

Op. 1389-1 (Power Circuit):
See Circuit diagram of MU/GU 3HAC039887-001 p.14

Latest revision:		Lab/Office: RA/RDP	IRC5 DESIGN Rel: 24:B EXTERNAL AXIS no 7, 8, 9 A41.3 .4 .5 , XS/XP7	Status: APPROVED	Plant: = Location: + Sublocation: +
Prepared by, date: A Hägglund	Approved by, date: S Hällgren 2024-03-18			Document no. 3HAC024480-011	Rev. Ind 18

We reserve all rights in this document and in the information contained therein. Reproduction, use or disclosure to third parties without express authority is strictly forbidden. © Copyright ABB

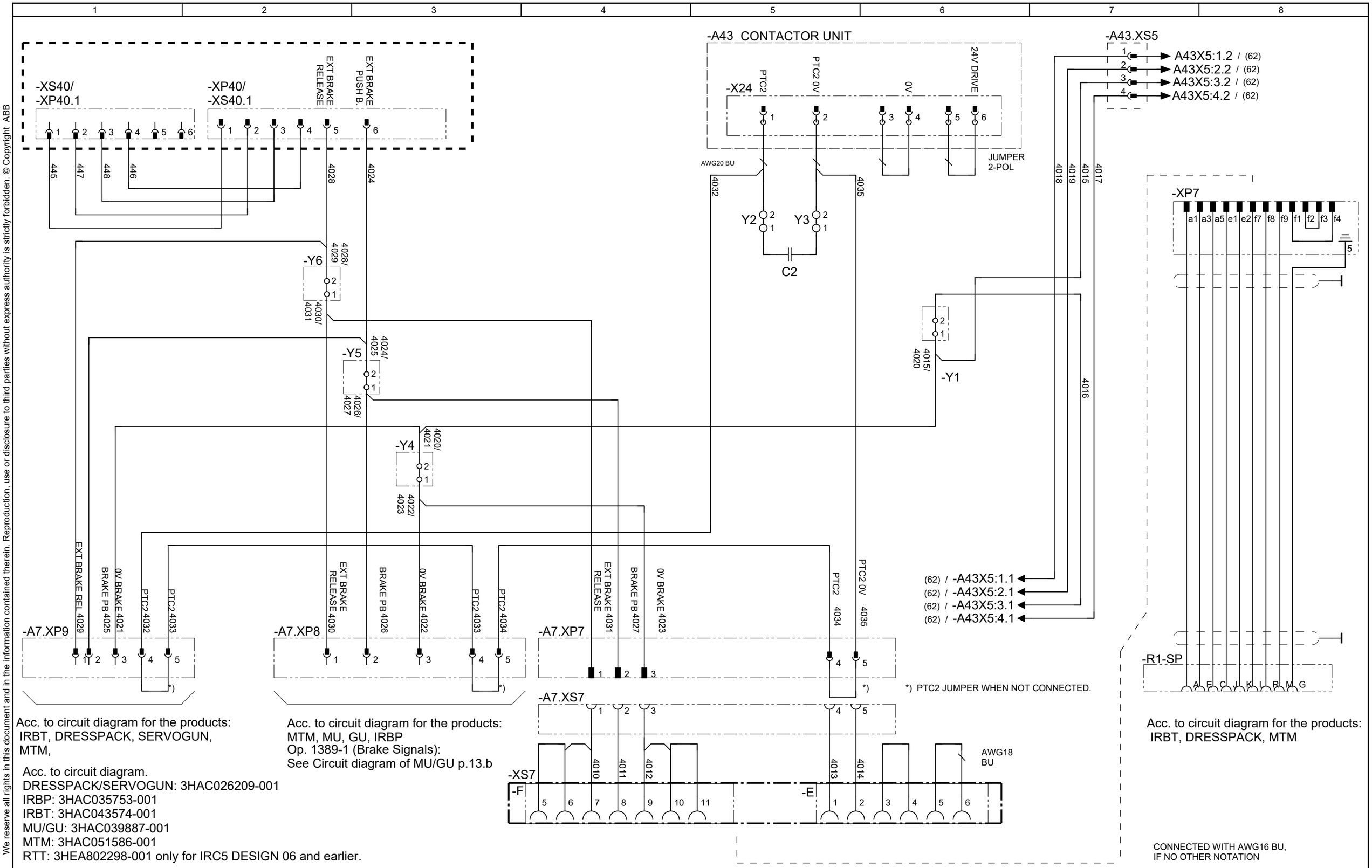

Acc. to circuit diagram for the products:
IRBT, DRESSPACK, SERVOGUN,
MTM,

Acc. to circuit diagram.
DRESSPACK/SERVOGUN: 3HAC026209-001
IRBP: 3HAC035753-001
IRBT: 3HAC043574-001
MU/GU: 3HAC039887-001
MTM: 3HAC051586-001
RTT: 3HEA802298-001 only for IRC5 DESIGN 06 and earlier.

Acc. to circuit diagram for the products:
MTM, MU, GU, IRBP
Op. 1389-1 (Brake Signals):
See Circuit diagram of MU/GU p.13.b

Acc. to circuit diagram for the products:
IRBT, DRESSPACK, MTM

CONNECTED WITH AWG16 BU,
IF NO OTHER NOTATION

Latest revision:		ABB	Lab/Office: RA/RDP	IRC5 DESIGN Rel: 24:B EXTERNAL AXES ADAPTER HARNESS XS/XP40, A43:XP5, A7:XP7 :XP8 :XP9 Only for rel.14.1 and later.	Status: APPROVED Plant: = Location: + Sublocation: +
Prepared by, date: A Hägglund	Approved by, date: S Hällgren 2024-03-18				Document no. 3HAC024480-011 Rev. Ind 18 Page 75.1 Next 76 Total 164

We reserve all rights in this document and in the information contained therein. Reproduction, use or disclosure to third parties without express authority is strictly forbidden. © Copyright ABB

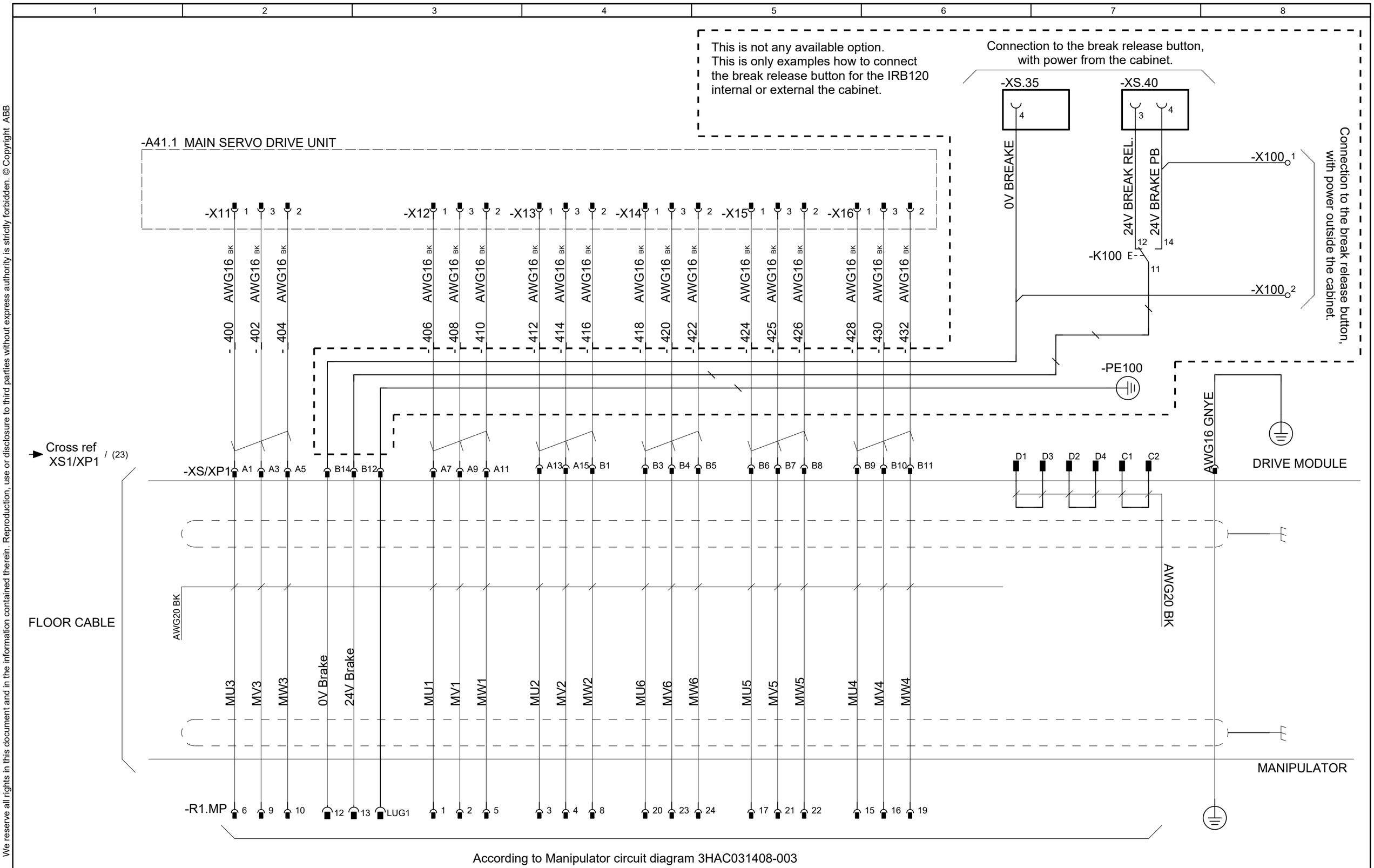

According to Manipulator circuit diagram 3HAC031408-003

Latest revision:		Lab/Office: RA/RDP	IRC5 DESIGN Rel: 24:B SERVO DRIVE SYSTEM IRB 120	Status: APPROVED	Plant: = Location: + Sublocation: +
				Document no. 3HAC024480-011	Rev. Ind 18
					Page 76 Next 77 Total 164
Prepared by, date: A Hägglund	Approved by, date: S Hällgren 2024-03-18				

We reserve all rights in this document and in the information contained therein. Reproduction, use or disclosure to third parties without express authority is strictly forbidden. © Copyright ABB

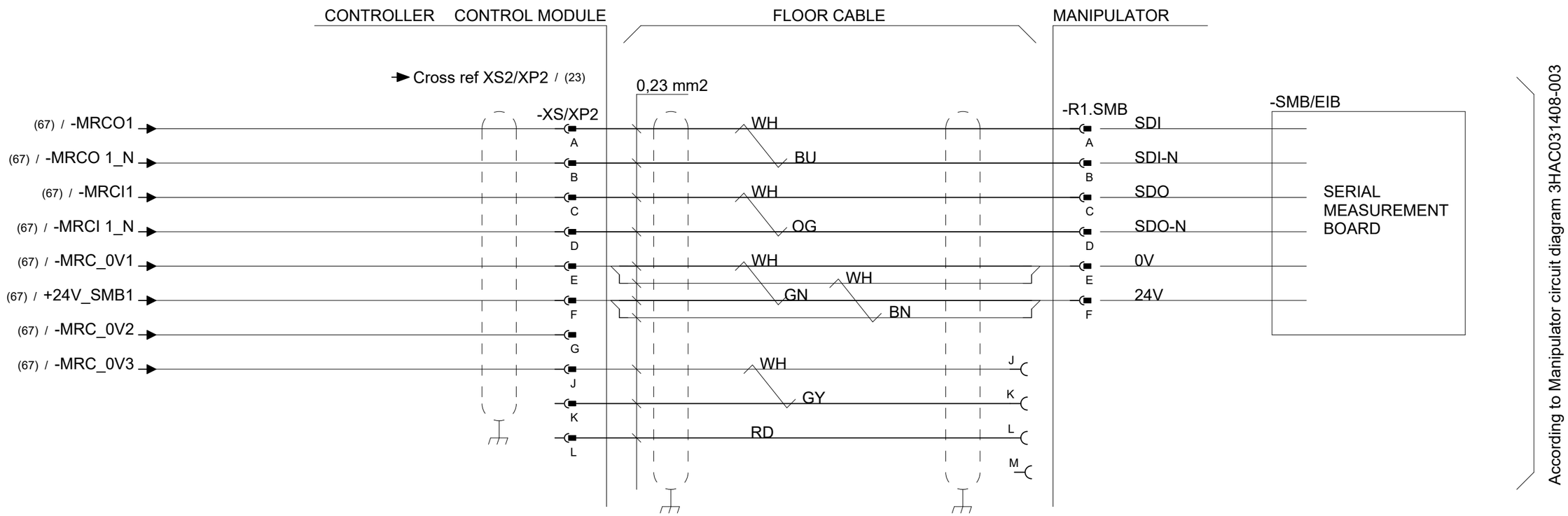

Latest revision:		ABB Lab/Office: RA/RDP	IRC5 DESIGN Rel: 24:B CONTROL CABLE IRB 120	Status: APPROVED	Plant: = Location: + Sublocation: +	
				Document no. 3HAC024480-011	Rev. Ind 18	Page 77 Next 78 Total 164
Prepared by, date: A Hägglund	Approved by, date: S Hällgren 2024-03-18					

We reserve all rights in this document and in the information contained therein. Reproduction, use or disclosure to third parties without express authority is strictly forbidden. © Copyright ABB

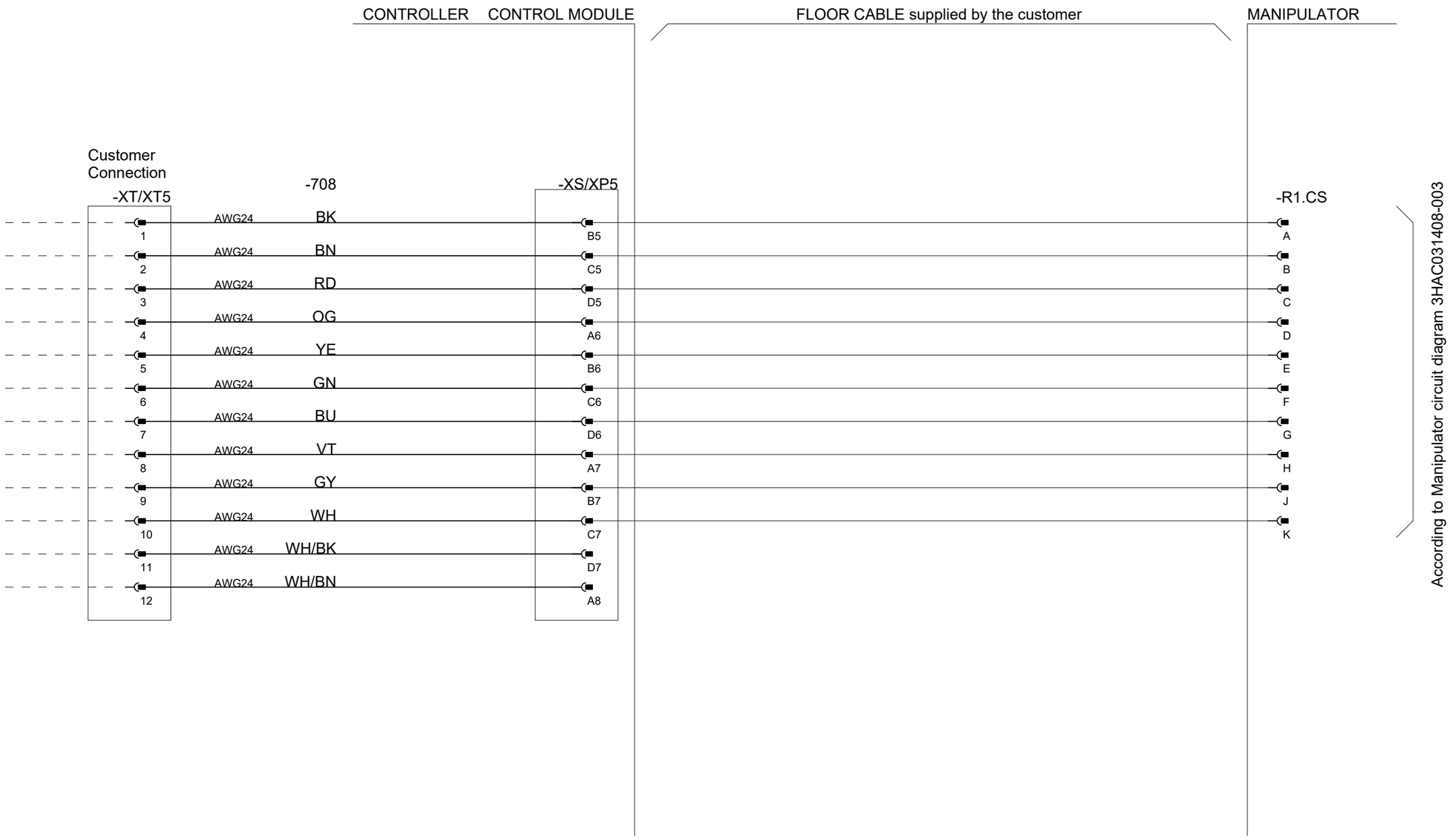

Latest revision:		ABB	Lab/Office: RA/RDP	IRC5 DESIGN Rel: 24:B CUSTOMER SIGNALS IRB 120	Status: APPROVED	Plant: = Location: + Sublocation: +
Prepared by, date: A Hägglund	Approved by, date: S Hällgren 2024-03-18				Document no. 3HAC024480-011	Rev. Ind 18
						Page 78 Next 79 Total 164

We reserve all rights in this document and in the information contained therein. Reproduction, use or disclosure to third parties without express authority is strictly forbidden. © Copyright ABB

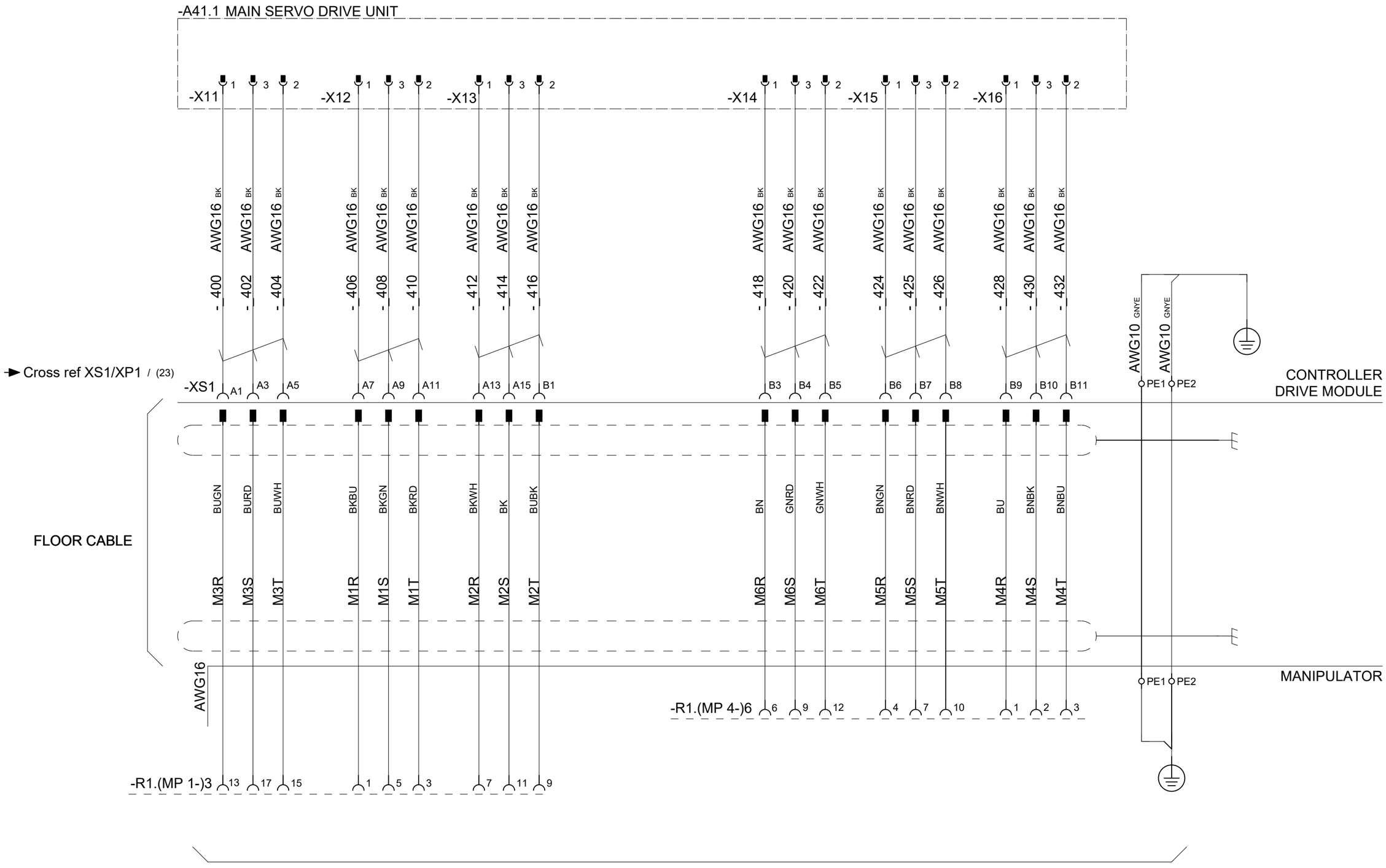

According to Manipulator circuit diagram 3HAC6816-3

Latest revision:		Lab/Office: RA/RDP	IRC5 DESIGN Rel: 24:B SERVO DRIVE SYSTEM IRB 140	Status: APPROVED	Plant: = Location: + Sublocation: +
Prepared by, date: A Hägglund	Approved by, date: S Hällgren 2024-03-18			Document no. 3HAC024480-011	Rev. Ind 18

We reserve all rights in this document and in the information contained therein. Reproduction, use or disclosure to third parties without express authority is strictly forbidden. © Copyright ABB

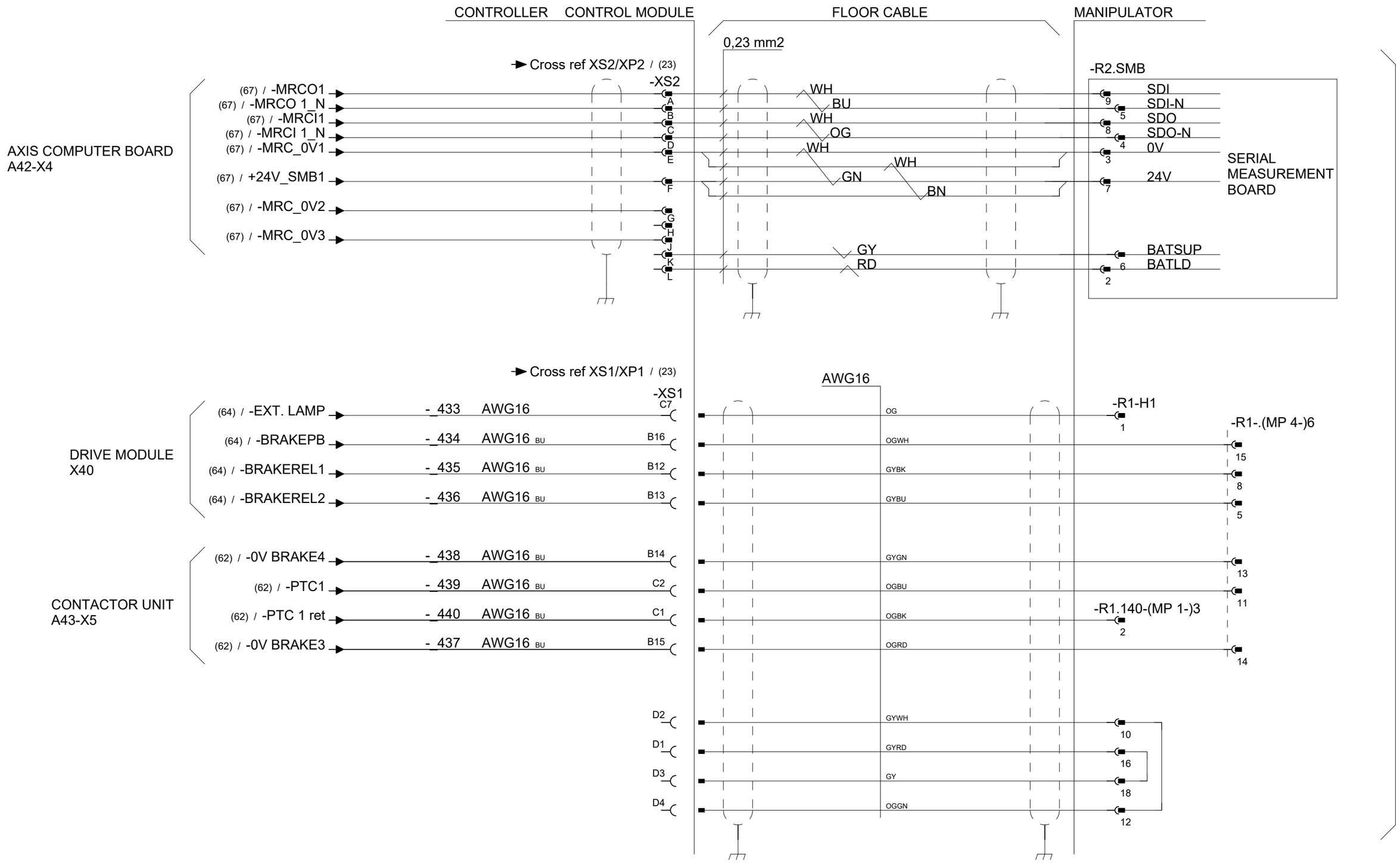

Latest revision:		Lab/Office: RA/RDP	IRC5 DESIGN Rel: 24:B CONTROL CABLE IRB 140	Status: APPROVED	Plant: = Location: + Sublocation: +	
Prepared by, date: A Hägglund	Approved by, date: S Hällgren 2024-03-18			Document no. 3HAC024480-011	Rev. Ind 18	Page 80 Next 81 Total 164

We reserve all rights in this document and in the information contained therein. Reproduction, use or disclosure to third parties without express authority is strictly forbidden. © Copyright ABB

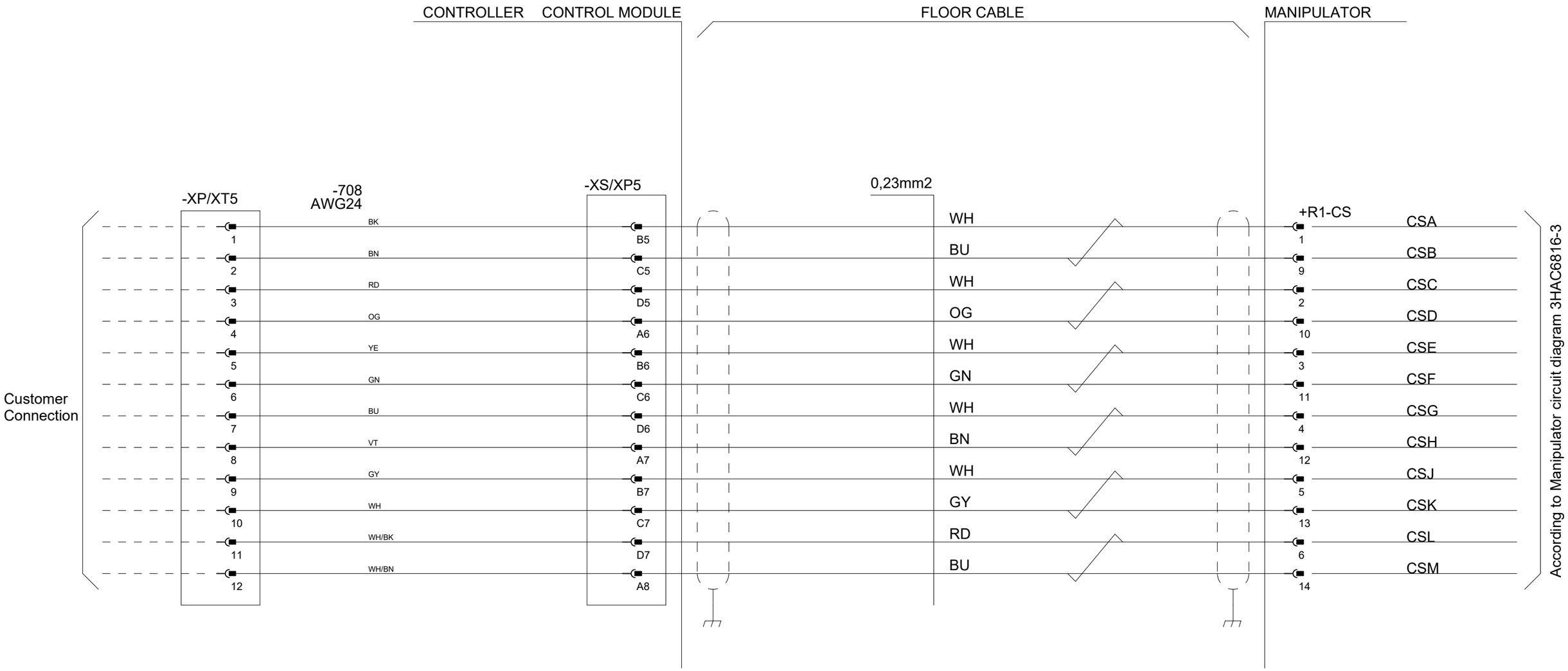

Latest revision:		ABB Lab/Office: RA/RDP	IRC5 DESIGN Rel: 24:B CUSTOMER SIGNAL SINGLE CABINET IRB 140	Status: APPROVED	Plant: = Location: + Sublocation: +	
Prepared by, date: A Hägglund	Approved by, date: S Hällgren 2024-03-18			Document no. 3HAC024480-011	Rev. Ind 18	Page 81 Next 82 Total 164

We reserve all rights in this document and in the information contained therein. Reproduction, use or disclosure to third parties without express authority is strictly forbidden. © Copyright ABB

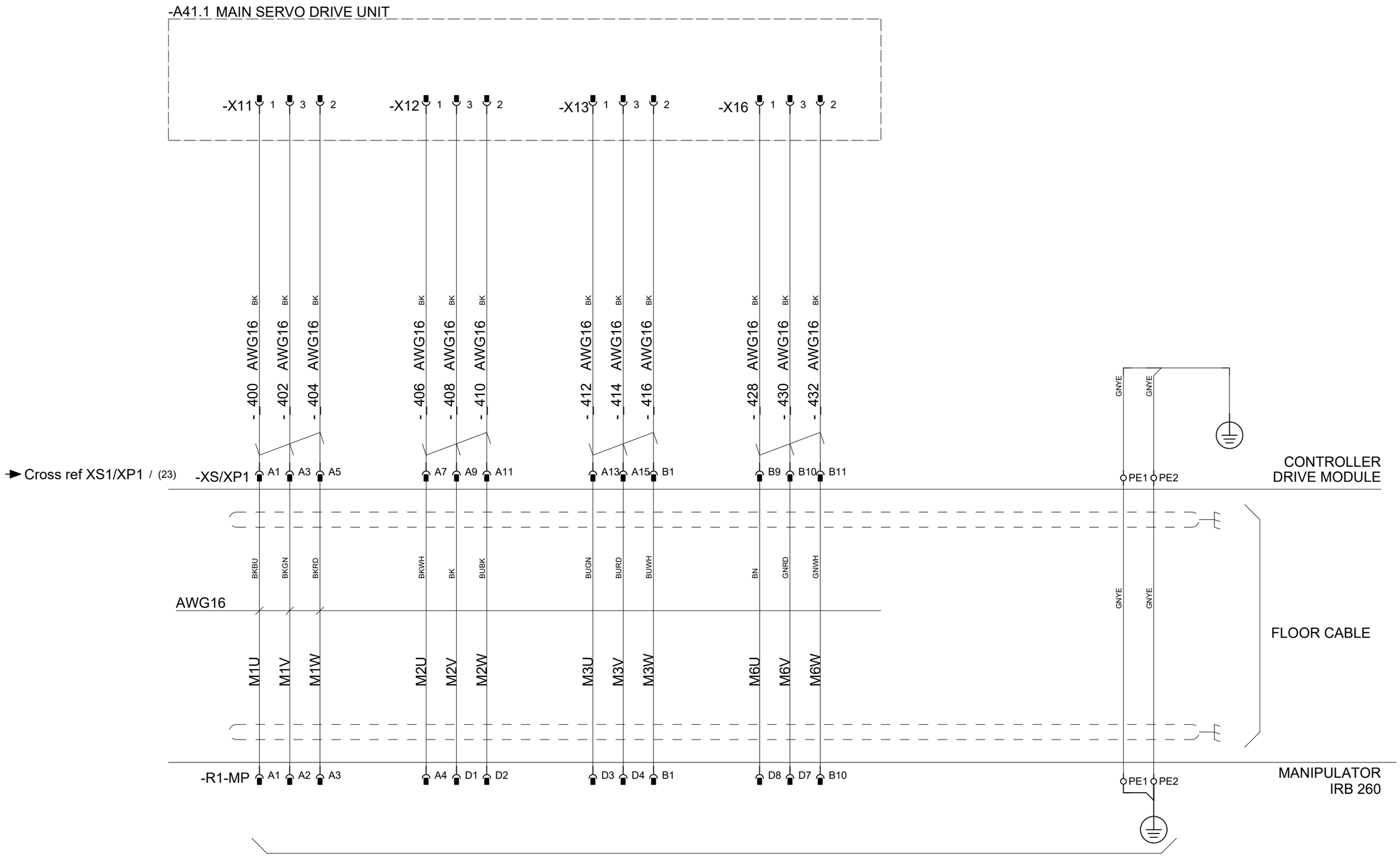

According to Manipulator circuit diagram 3HAC025611-001

Latest revision:		ABB	Lab/Office: RA/RDP	IRC5 DESIGN Rel: 24:B SERVO DRIVE UNIT IRB 260	Status: APPROVED	Plant: = Location: + Sublocation: +
					Document no. 3HAC024480-011	Rev. Ind 18
						Page 82 Next 83 Total 164
Prepared by, date: A Hägglund	Approved by, date: S Hällgren 2024-03-18					

We reserve all rights in this document and in the information contained therein. Reproduction, use or disclosure to third parties without express authority is strictly forbidden. © Copyright ABB

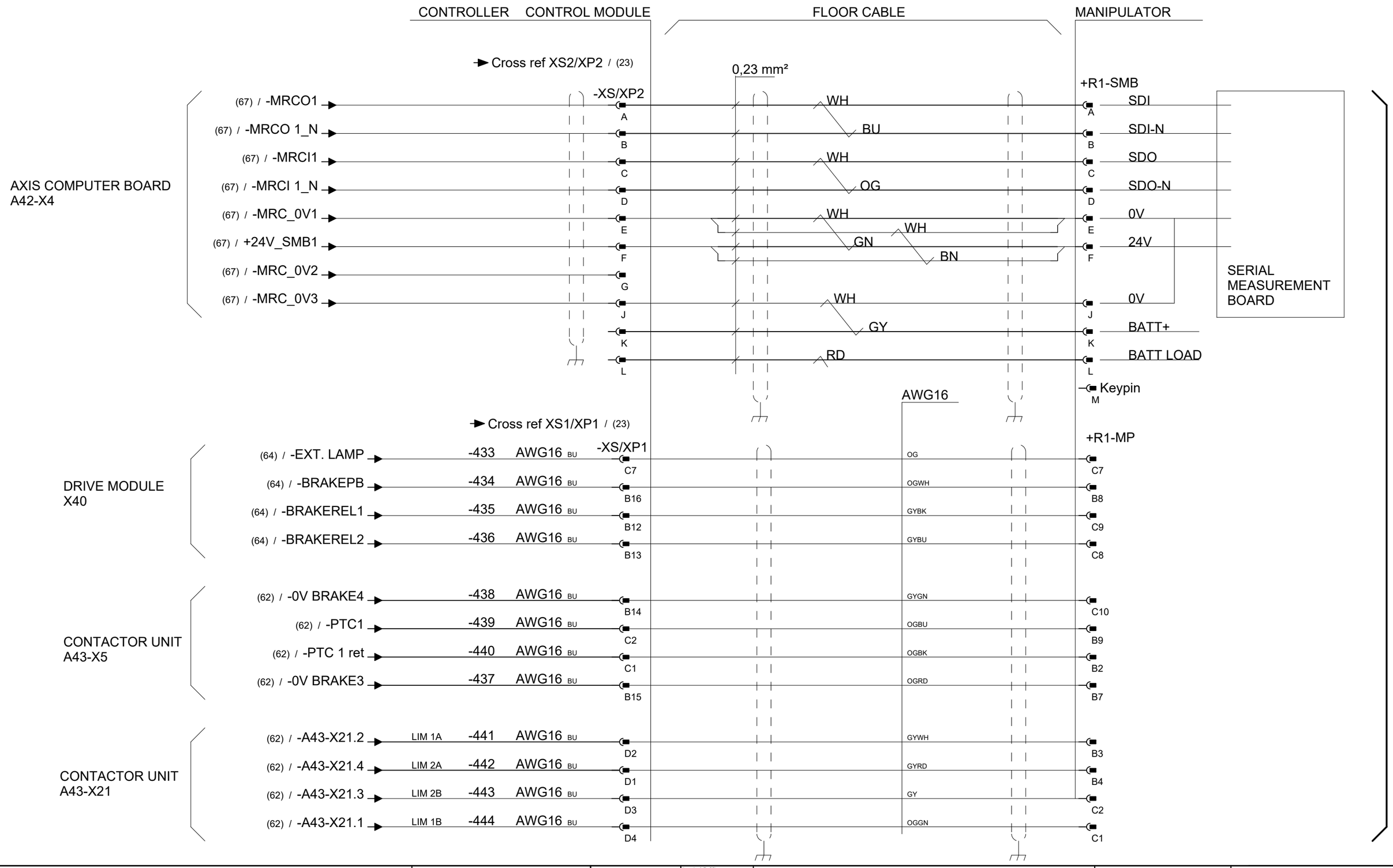

Latest revision:		Lab/Office: RA/RDP	IRC5 DESIGN Rel: 24:B CONTROL CABLE IRB 260	Status: APPROVED	Plant: = Location: + Sublocation: +	
				Document no. 3HAC024480-011	Rev. Ind 18	Page 83 Next 84 Total 164
Prepared by, date: A Hägglund	Approved by, date: S Hällgren 2024-03-18					

We reserve all rights in this document and in the information contained therein. Reproduction, use or disclosure to third parties without express authority is strictly forbidden. © Copyright ABB

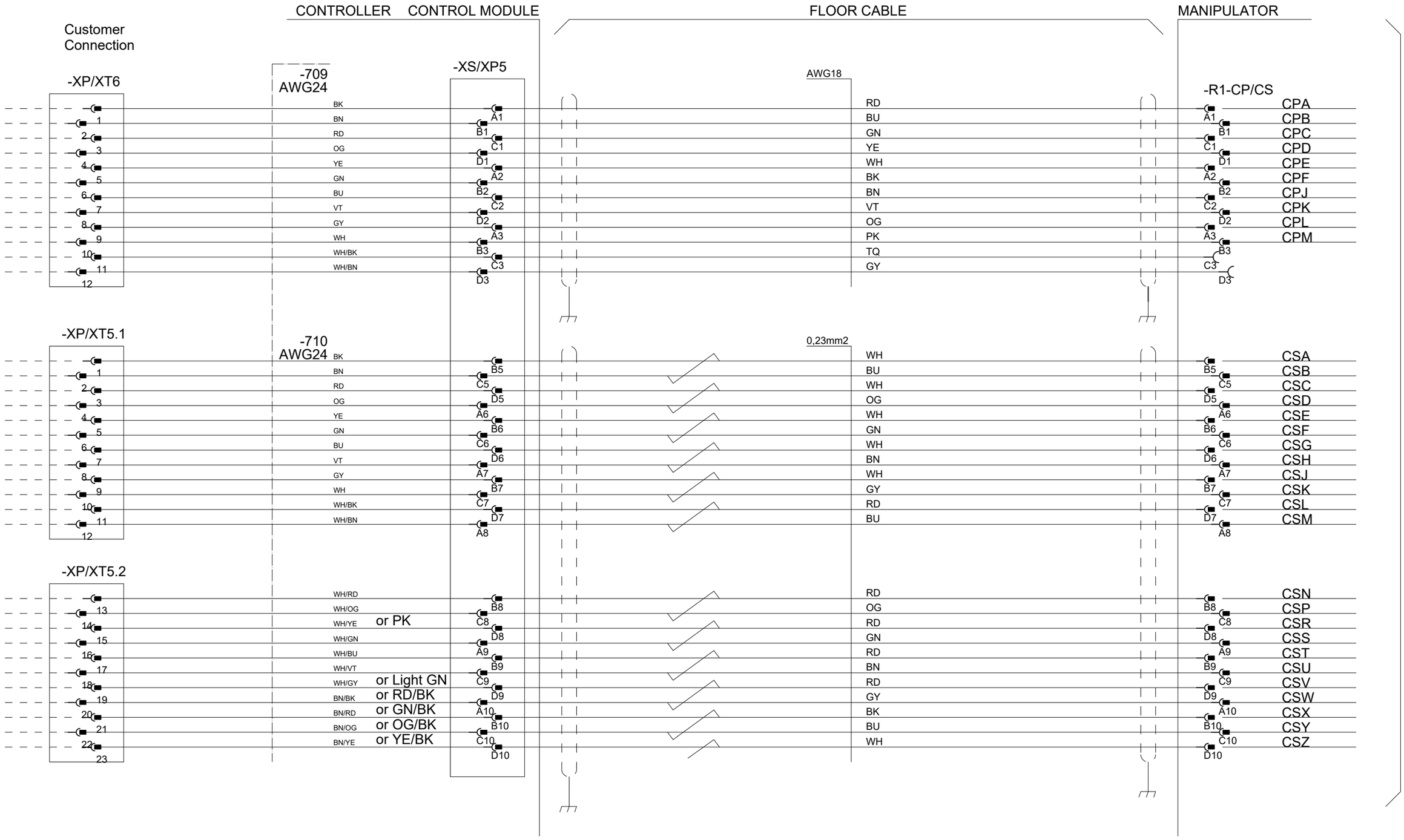

According to Manipulator circuit diagram 3HAC025611-001

Latest revision:		ABB	Lab/Office: RA/RDP	IRC5 DESIGN Rel: 24:B CUSTOMER POWER/SIGNAL SINGLE CABINET IRB 260	Status: APPROVED	Plant: = Location: + Sublocation: +	
Prepared by, date: A Hägglund	Approved by, date: S Hällgren 2024-03-18				Document no. 3HAC024480-011	Rev. Ind 18	Page 84 Next 85 Total 164

We reserve all rights in this document and in the information contained therein. Reproduction, use or disclosure to third parties without express authority is strictly forbidden. © Copyright ABB

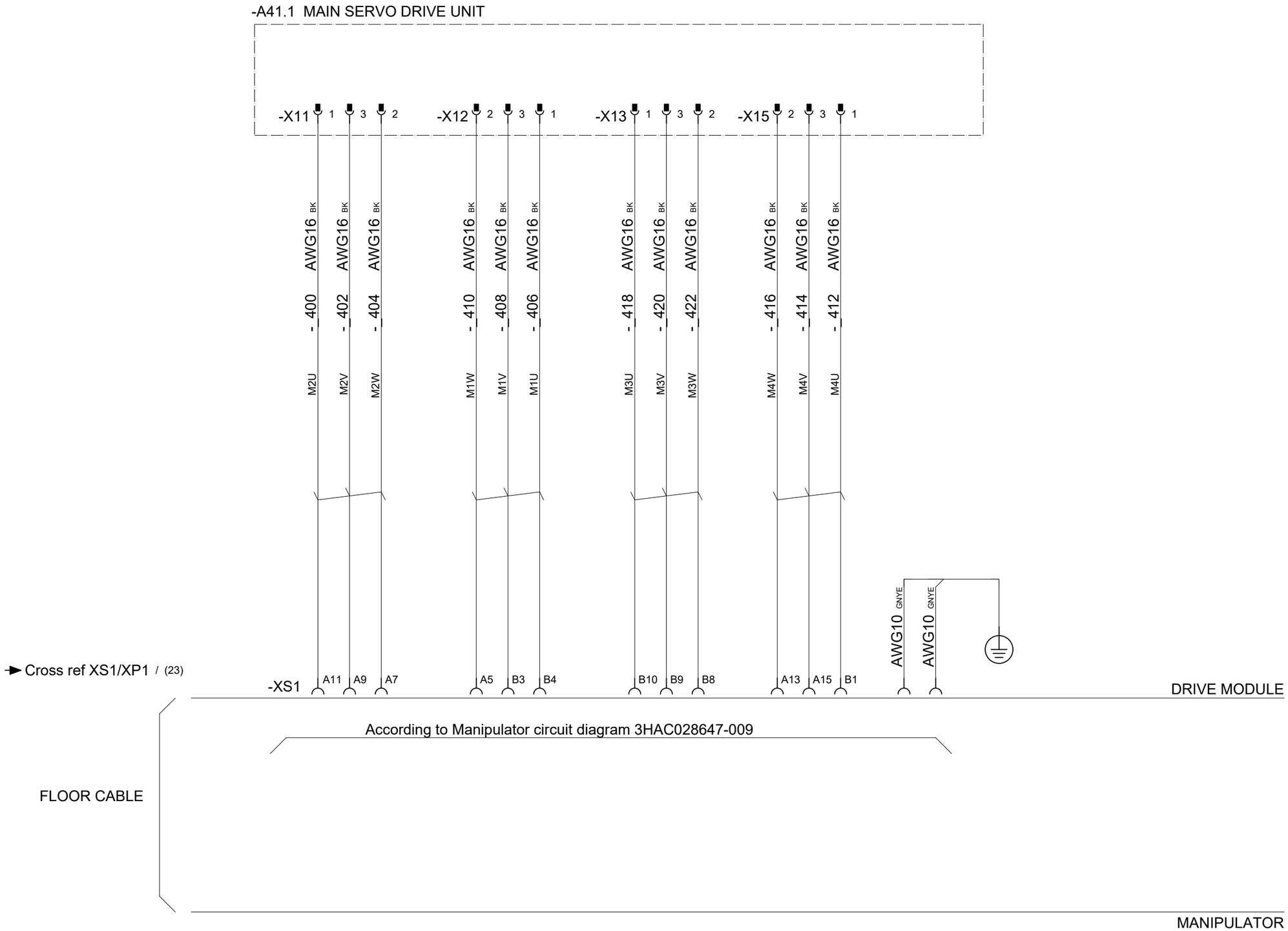

Latest revision:		Lab/Office: RA/RDP	IRC5 DESIGN Rel: 24:B SERVO DRIVE UNITS IRB 360	Status: APPROVED	Plant: = Location: + Sublocation: +	
				Document no. 3HAC024480-011	Rev. Ind 18	Page 85 Next 86 Total 164
Prepared by, date: A Hägglund	Approved by, date: S Hällgren 2024-03-18					

We reserve all rights in this document and in the information contained therein. Reproduction, use or disclosure to third parties without express authority is strictly forbidden. © Copyright ABB

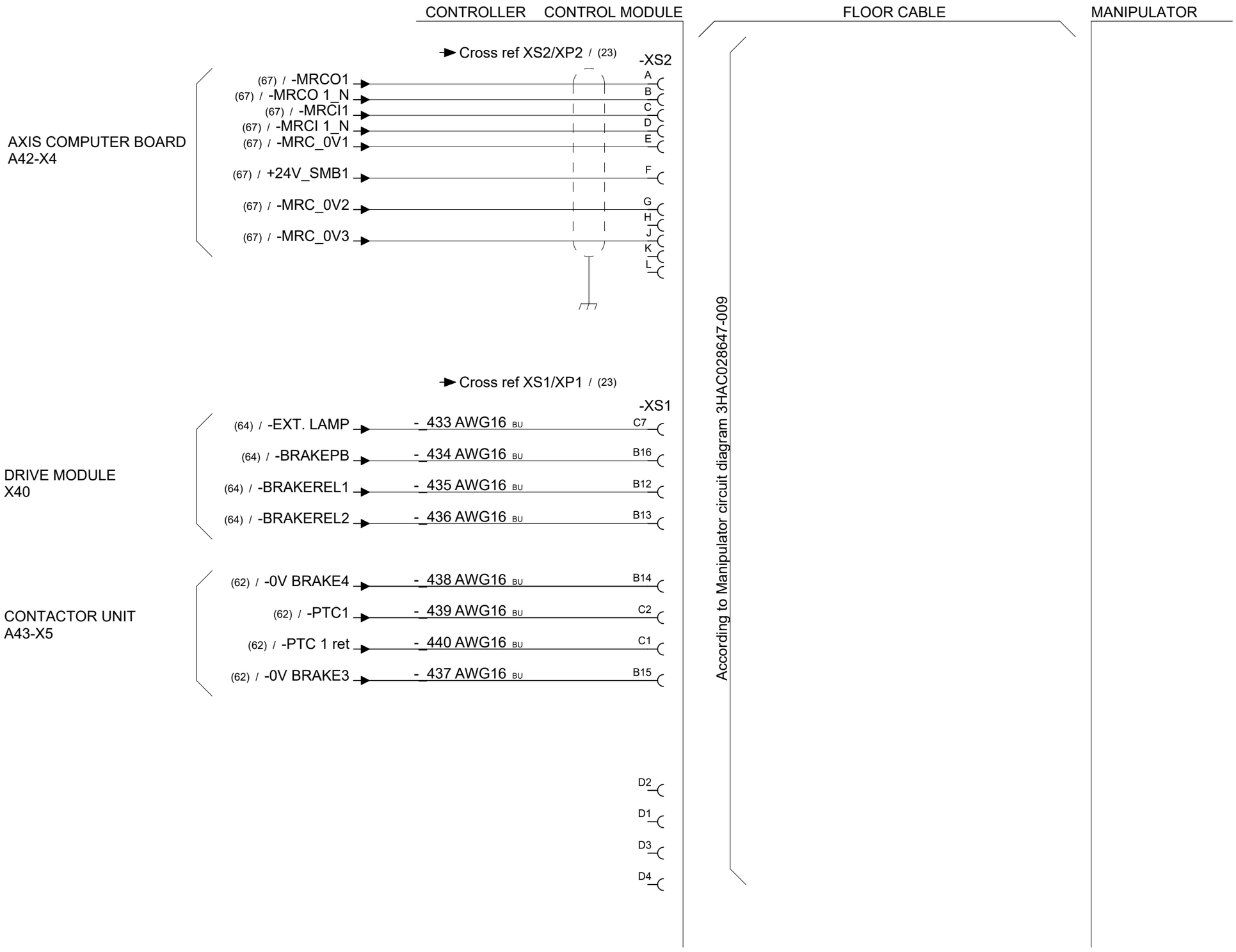

Latest revision:		ABB	Lab/Office: RA/RDP	IRC5 DESIGN Rel: 24:B CONTROL CABLE IRB 360	Status: APPROVED	Plant: = Location: + Sublocation: +
Prepared by, date: A Hägglund	Approved by, date: S Hällgren 2024-03-18				Document no. 3HAC024480-011	Rev. Ind 18

We reserve all rights in this document and in the information contained therein. Reproduction, use or disclosure to third parties without express authority is strictly forbidden. © Copyright ABB

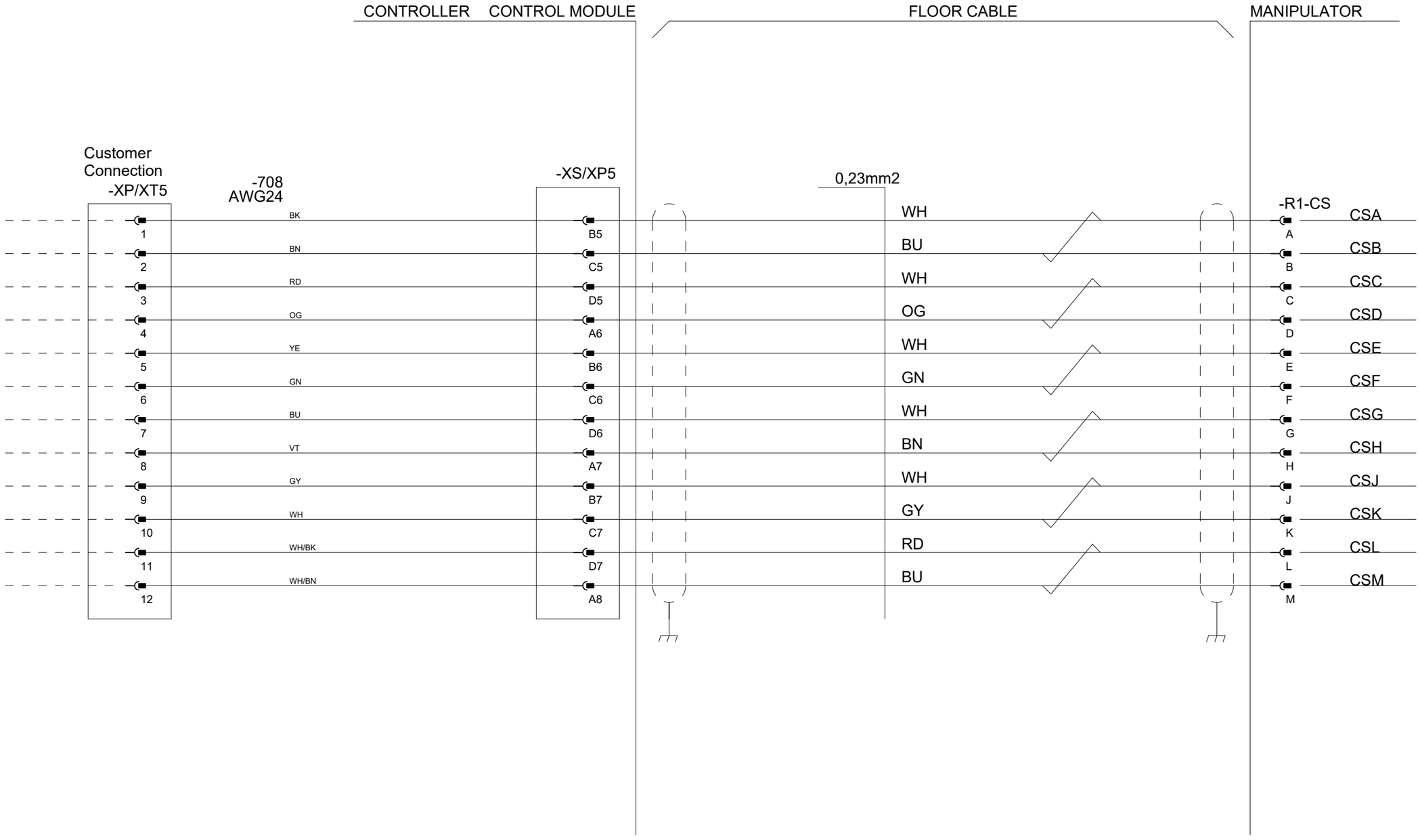

According to Manipulator circuit diagram 3HAC028647-009

Latest revision:		ABB	Lab/Office: RA/RDP	IRC5 DESIGN Rel: 24:B CUSTOMER SIGNAL SINGLE CABINET IRB 360	Status: APPROVED	Plant: = Location: + Sublocation: +
Prepared by, date: A Hägglund	Approved by, date: S Hällgren 2024-03-18				Document no. 3HAC024480-011	Rev. Ind 18

We reserve all rights in this document and in the information contained therein. Reproduction, use or disclosure to third parties without express authority is strictly forbidden. © Copyright ABB

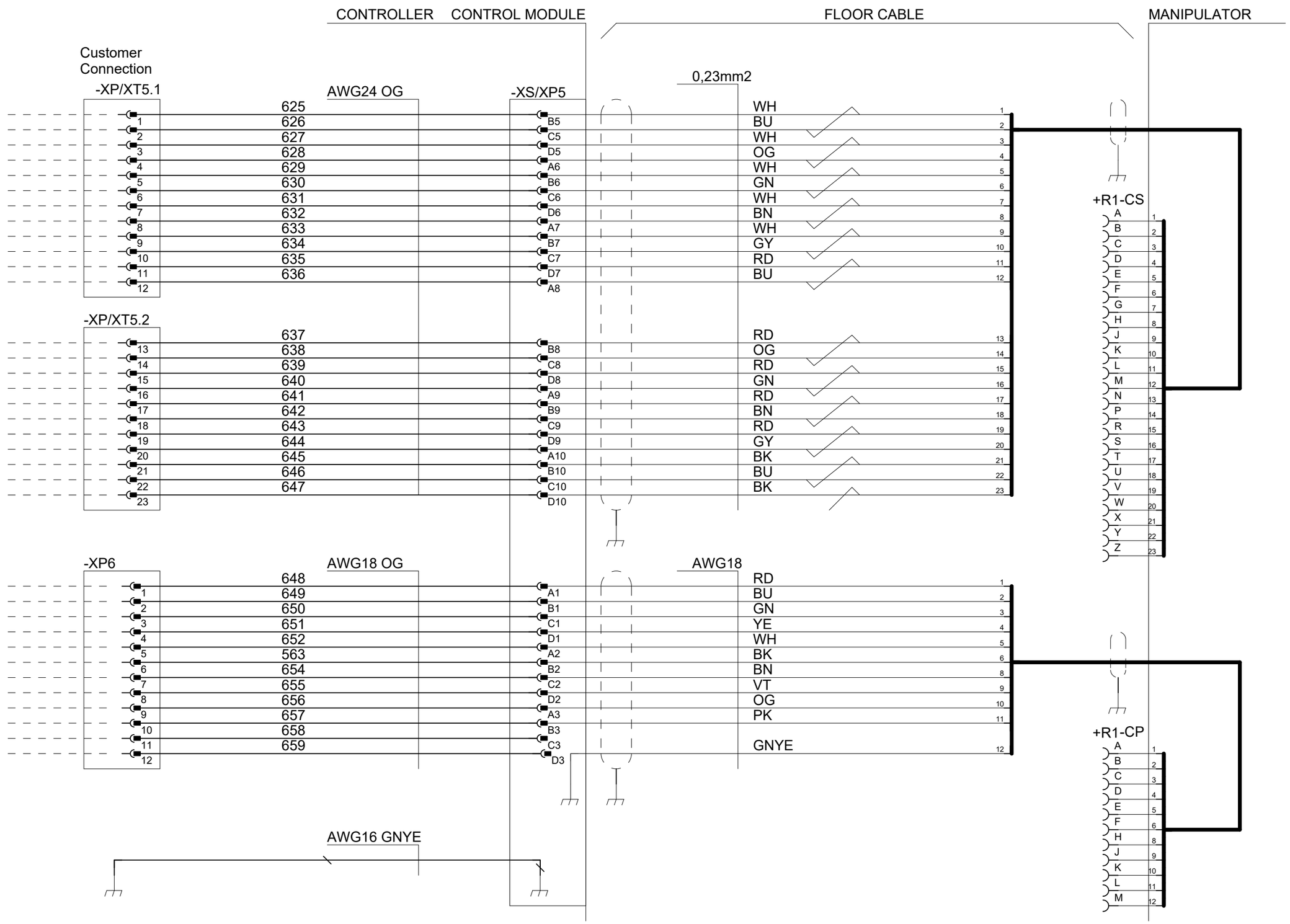

Latest revision:		ABB	Lab/Office: RA/RDP	IRC5 DESIGN Rel: 24:B CUSTOMER POWER/SIGNAL SINGLE CABINET IRB 360	Status: APPROVED	Plant: = Location: + Sublocation: +
Prepared by, date: A Hägglund	Approved by, date: S Hällgren 2024-03-18				Document no. 3HAC024480-011	Rev. Ind 18

We reserve all rights in this document and in the information contained therein. Reproduction, use or disclosure to third parties without express authority is strictly forbidden. © Copyright ABB

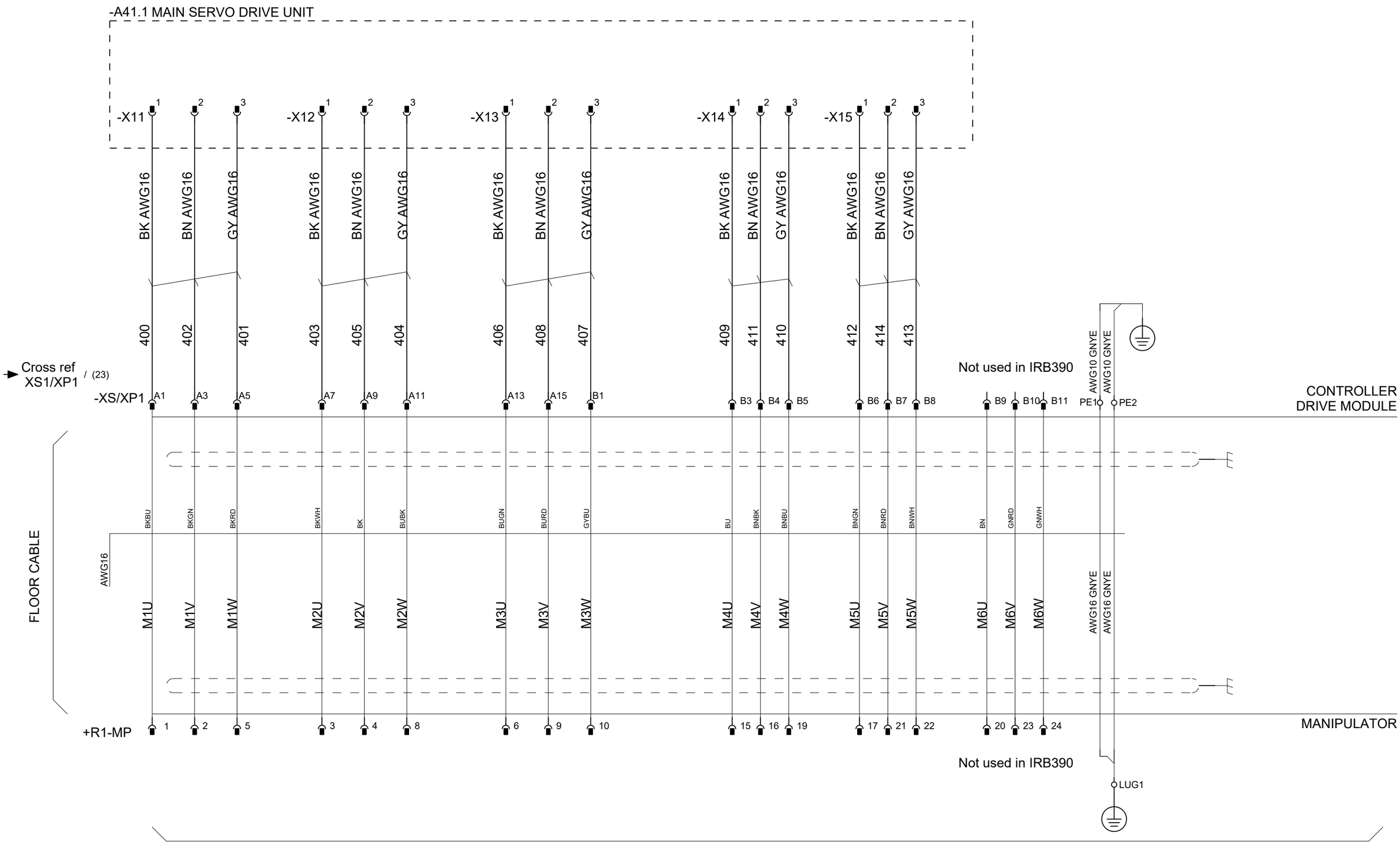

Acc. to Manipulator circuit diagram 3HAC060545-009

Latest revision:		Lab/Office: RA/RDP	IRC5 DESIGN Rel: 24:B SERVO DRIVE SYSTEM IRB 390	Status: APPROVED	Plant: = Location: + Sublocation: +
Prepared by, date: A Hägglund	Approved by, date: S Hällgren 2024-03-18			Document no. 3HAC024480-011	Rev. Ind 18
					Page 87.4 Next 87.5 Total 164

We reserve all rights in this document and in the information contained therein. Reproduction, use or disclosure to third parties without express authority is strictly forbidden. © Copyright ABB

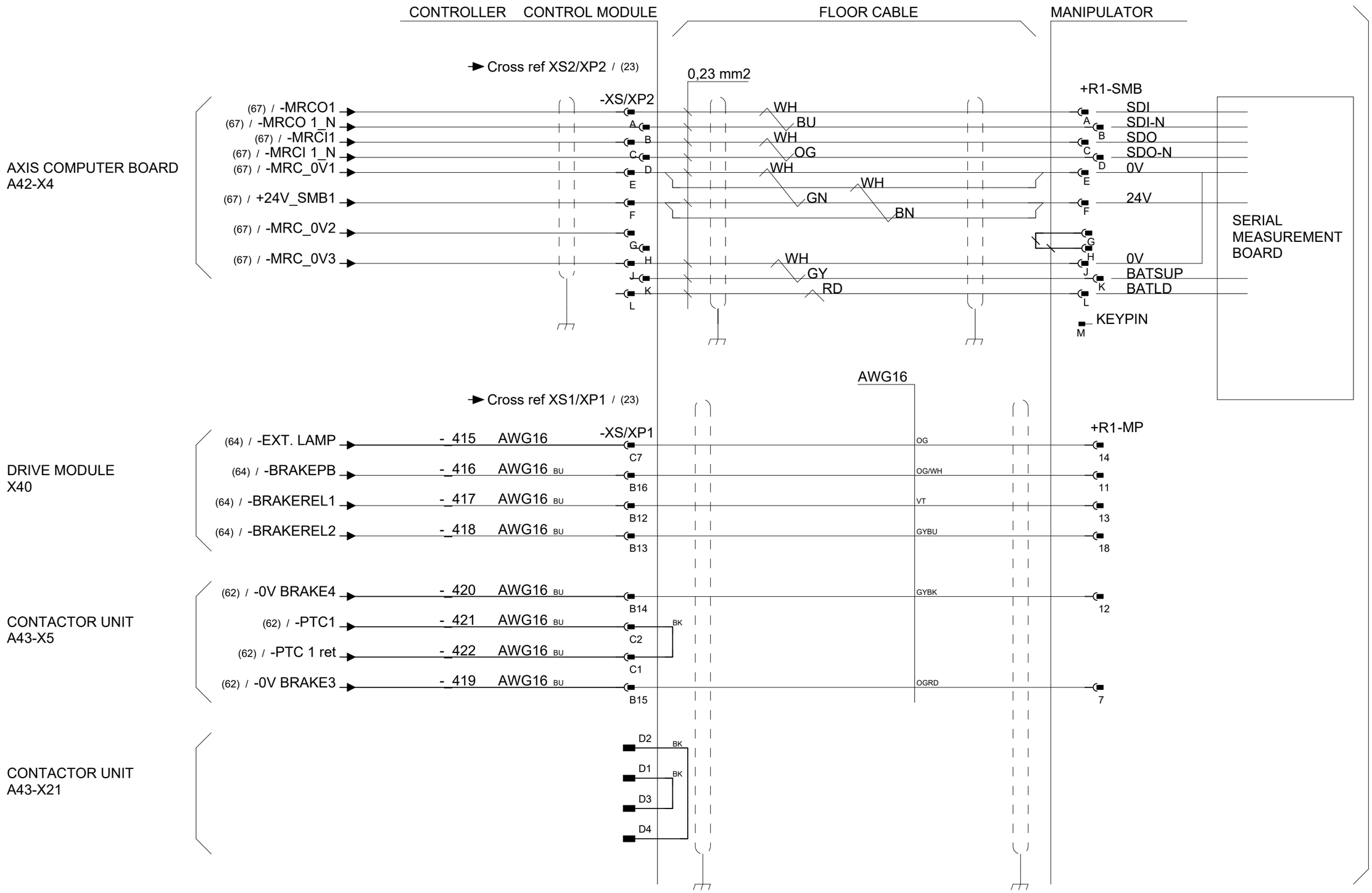

Latest revision:		Lab/Office: RA/RDP	IRC5 DESIGN Rel: 24:B CONTROL CABLE IRB 390	Status: APPROVED	Plant: = Location: + Sublocation: +	
Prepared by, date: A Hägglund	Approved by, date: S Hällgren 2024-03-18			Document no. 3HAC024480-011	Rev. Ind 18	Page 87.5 Next 88 Total 164

We reserve all rights in this document and in the information contained therein. Reproduction, use or disclosure to third parties without express authority is strictly forbidden. © Copyright ABB

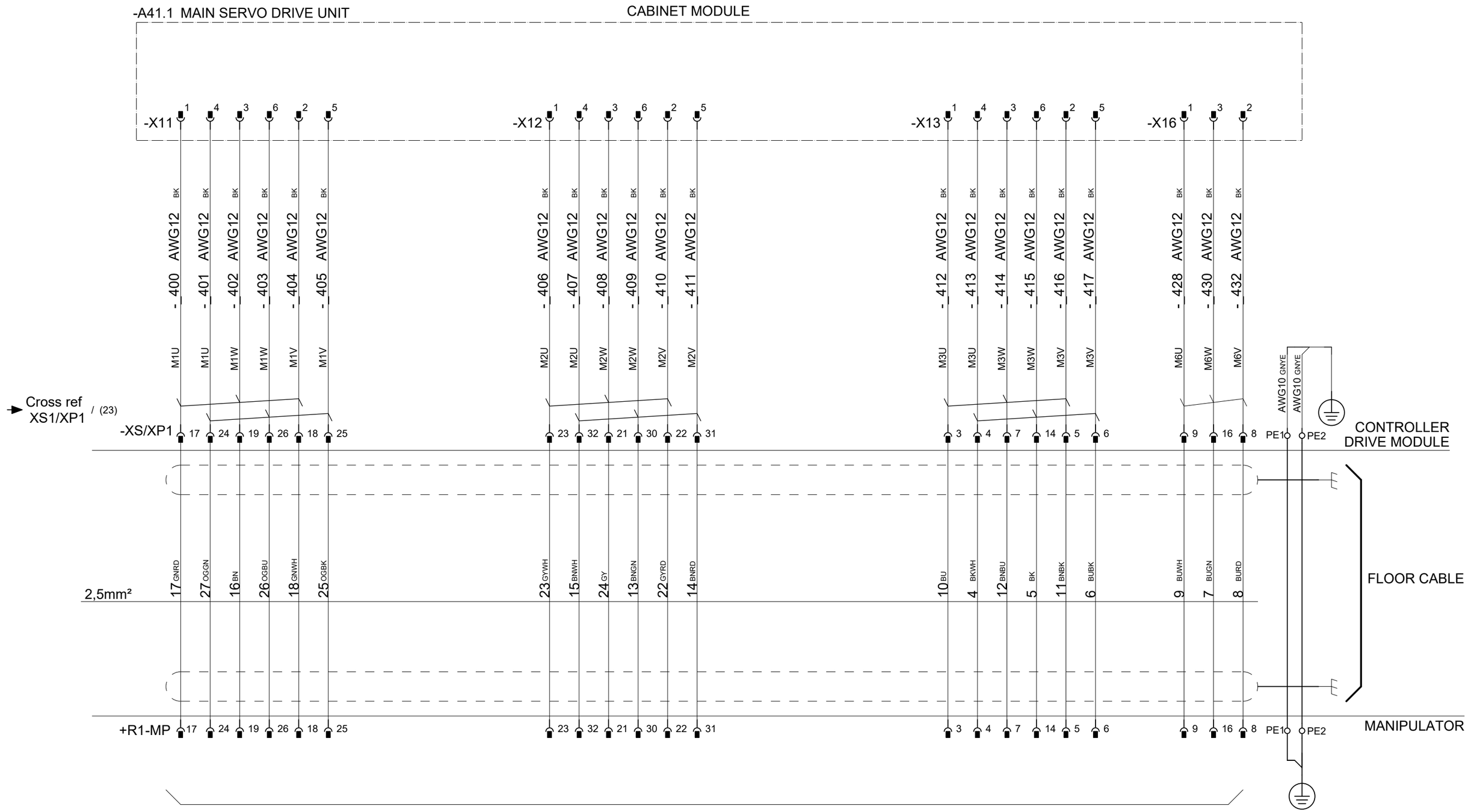

According to Manipulator circuit diagram 3HAC036446-005

Latest revision:		Lab/Office: RA/RDP	IRC5 DESIGN Rel: 24:B SERVO DRIVE SYSTEM IRB 460	Status: APPROVED	Plant: = Location: + Sublocation: +
Prepared by, date: A Hägglund	Approved by, date: S Hällgren 2024-03-18			Document no. 3HAC024480-011	Rev. Ind 18

We reserve all rights in this document and in the information contained therein. Reproduction, use or disclosure to third parties without express authority is strictly forbidden. © Copyright ABB

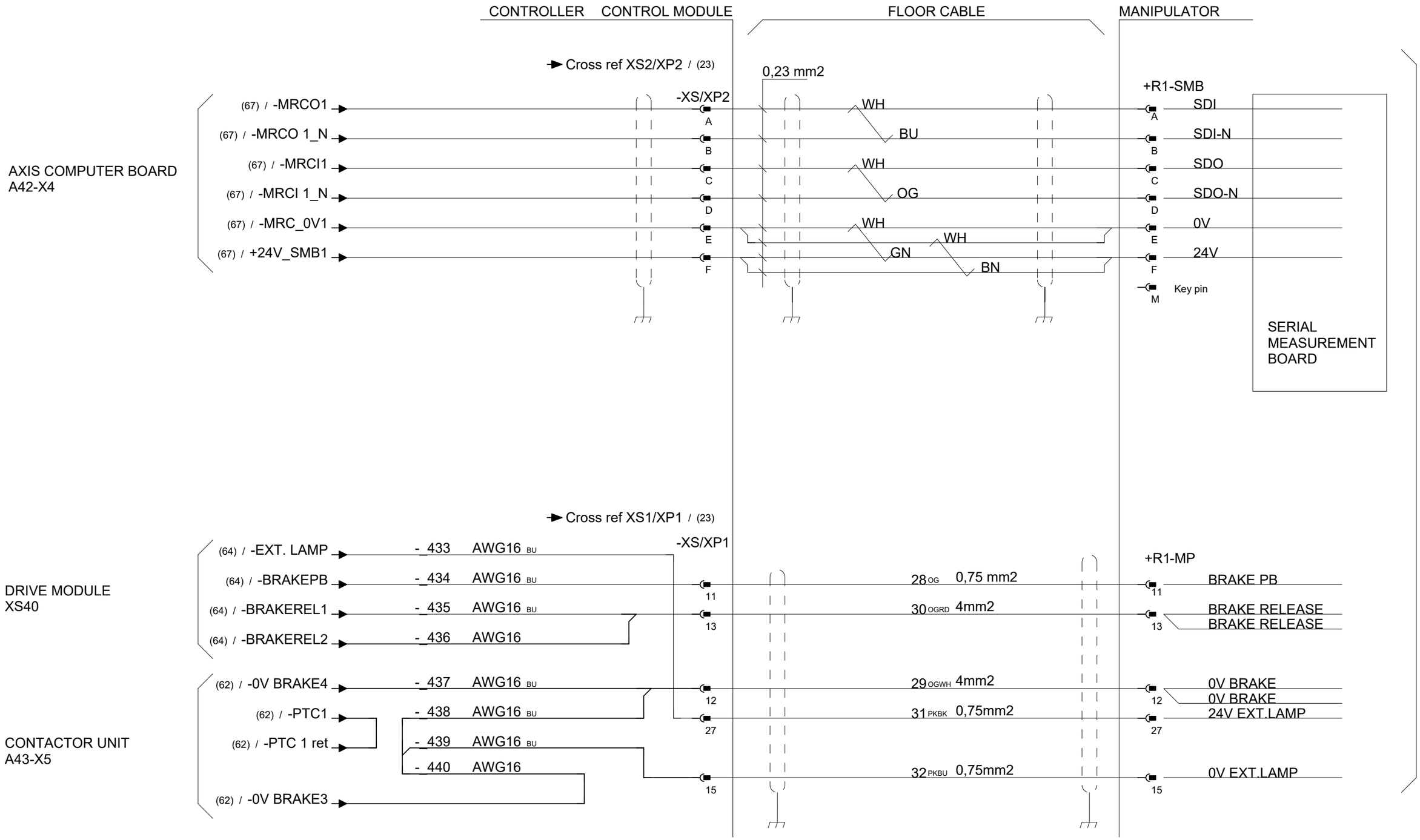

According to Manipulator IRB 460 circuit diagram 3HAC036446-005

Latest revision:		Lab/Office: RA/RDP	IRC5 DESIGN Rel: 24:B CONTROL CABLE IRB 460	Status: APPROVED	Plant: = Location: + Sublocation: +
				Document no. 3HAC024480-011	Rev. Ind 18
					Page 89 Next 90 Total 164
Prepared by, date: A Hägglund	Approved by, date: S Hällgren 2024-03-18				

We reserve all rights in this document and in the information contained therein. Reproduction, use or disclosure to third parties without express authority is strictly forbidden. © Copyright ABB

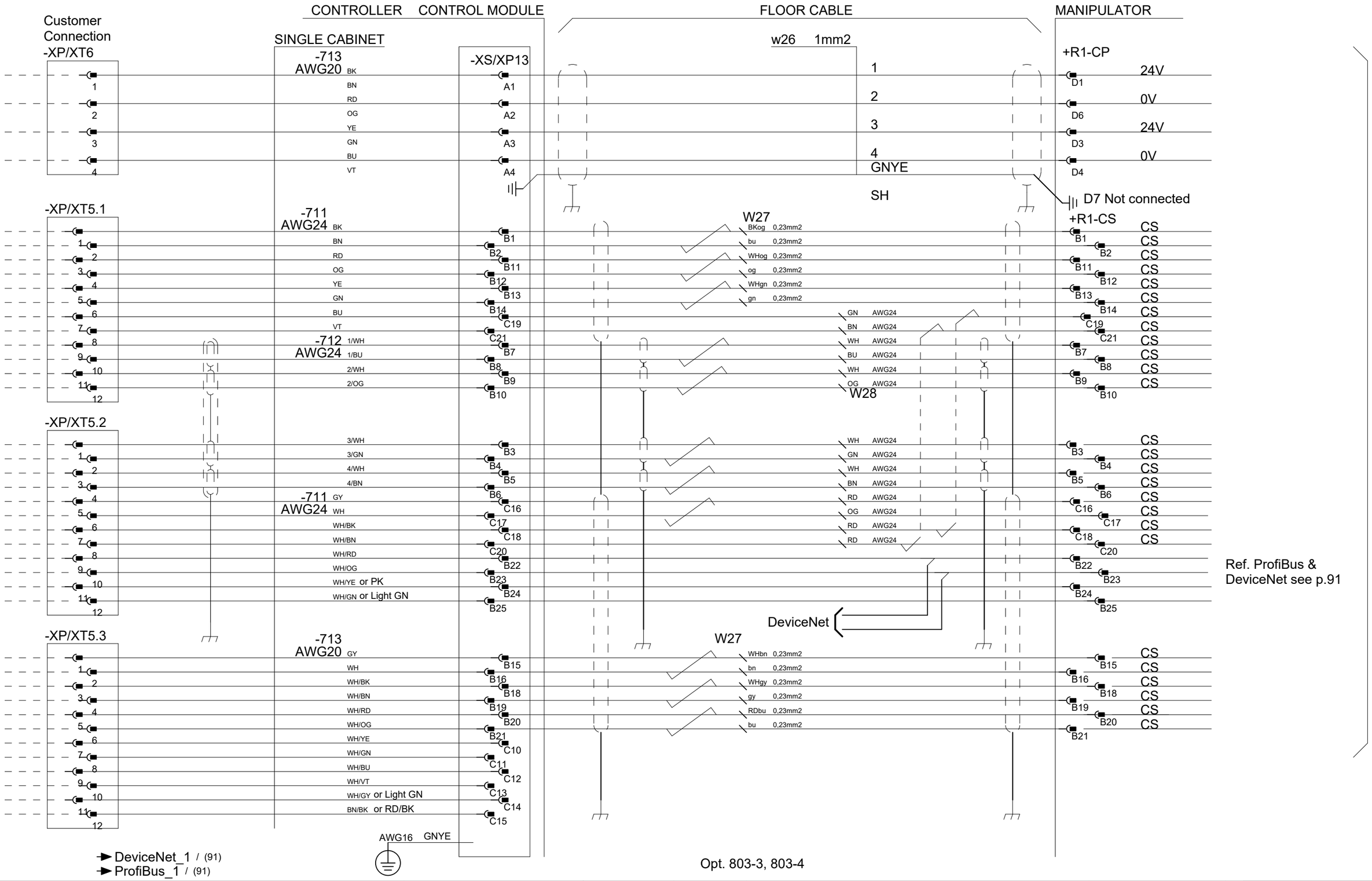

According to Manipulator IRB 660, 760 circuit diagram 3HAC025691-001
According to Manipulator IRB 460 circuit diagram 3HAC036446-005

Latest revision:		Lab/Office: RA/RDP	IRC5 DESIGN Rel: 24:B CUSTOMER POWER/SIGNAL IRB460, 660, 760	Status: APPROVED	Plant: = Location: + Sublocation: +	
Prepared by, date: A Hägglund	Approved by, date: S Hällgren 2024-03-18			Document no. 3HAC024480-011	Rev. Ind 18	Page 90 Next 91 Total 164

We reserve all rights in this document and in the information contained therein. Reproduction, use or disclosure to third parties without express authority is strictly forbidden. © Copyright ABB

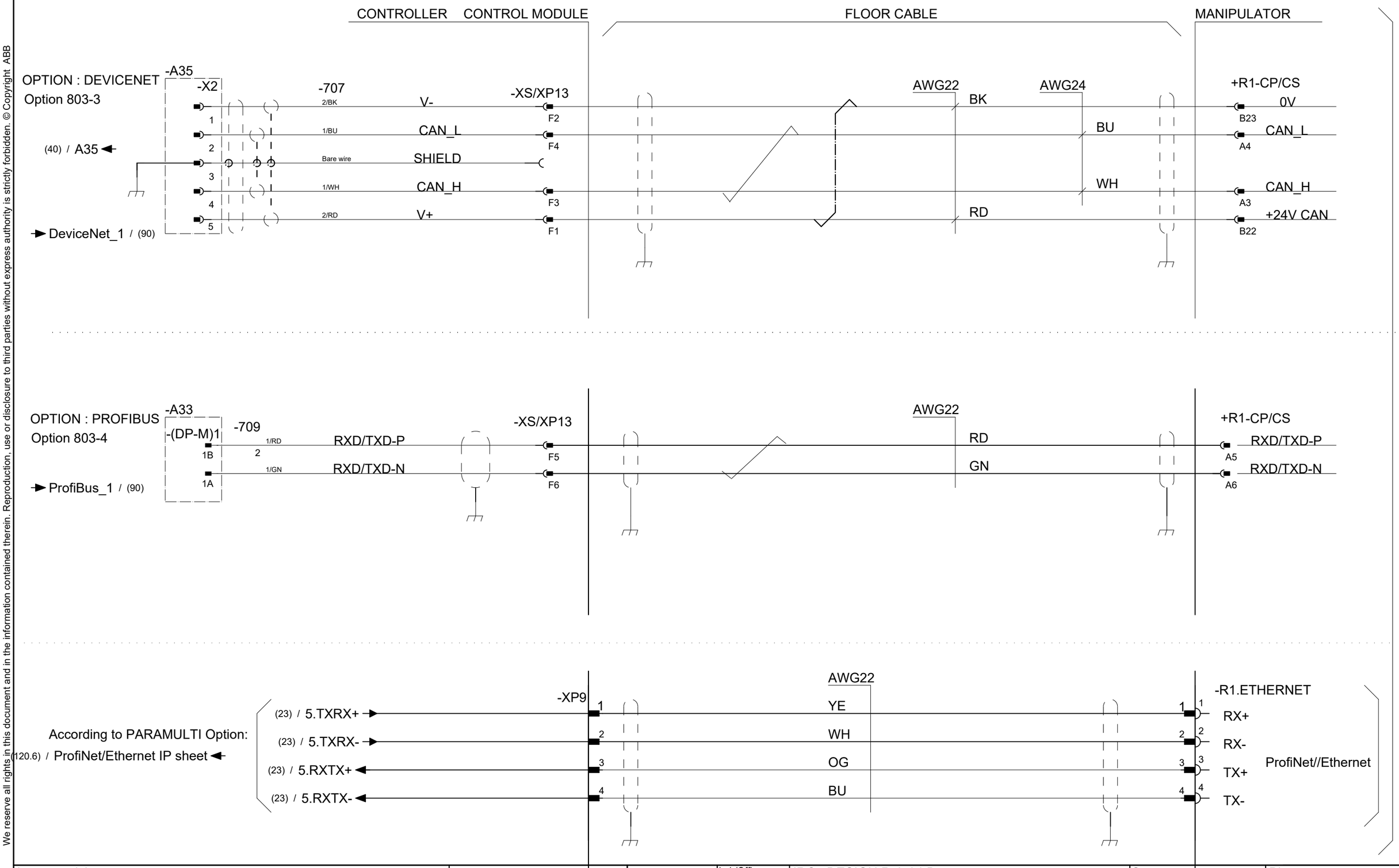

According to Manipulator IRB 660, 760 circuit diagram 3HAC025691-001
According to Manipulator IRB 460 circuit diagram 3HAC036446-005

Latest revision:		Lab/Office: RA/RDP	IRC5 DESIGN Rel: 24:B C-BUS/P-BUS/ CP/CS//Profi-Net IRB460, 660, 760	Status: APPROVED	Plant: = Location: + Sublocation: +
Prepared by, date: A Hägglund	Approved by, date: S Hällgren 2024-03-18			Document no. 3HAC024480-011	Rev. Ind 18
					Page 91 Next 92 Total 164

We reserve all rights in this document and in the information contained therein. Reproduction, use or disclosure to third parties without express authority is strictly forbidden. © Copyright ABB

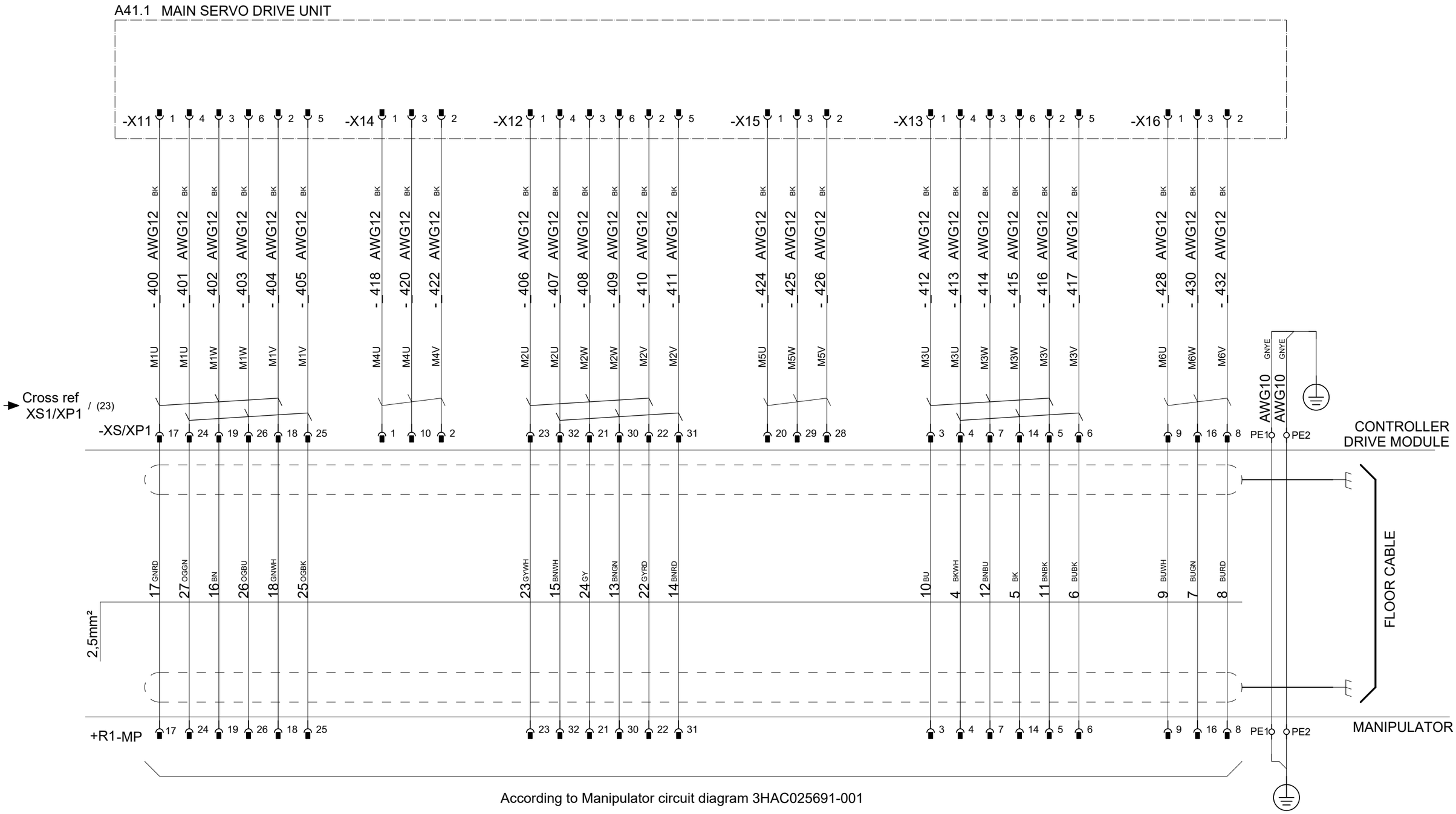

Latest revision:		Lab/Office: RA/RDP	IRC5 DESIGN Rel: 24:B SERVO DRIVE SYSTEM IRB 660, 760	Status: APPROVED	Plant: = Location: + Sublocation: +	
Prepared by, date: A Hägglund	Approved by, date: S Hällgren 2024-03-18			Document no. 3HAC024480-011	Rev. Ind 18	Page 92 Next 93 Total 164

We reserve all rights in this document and in the information contained therein. Reproduction, use or disclosure to third parties without express authority is strictly forbidden. © Copyright ABB

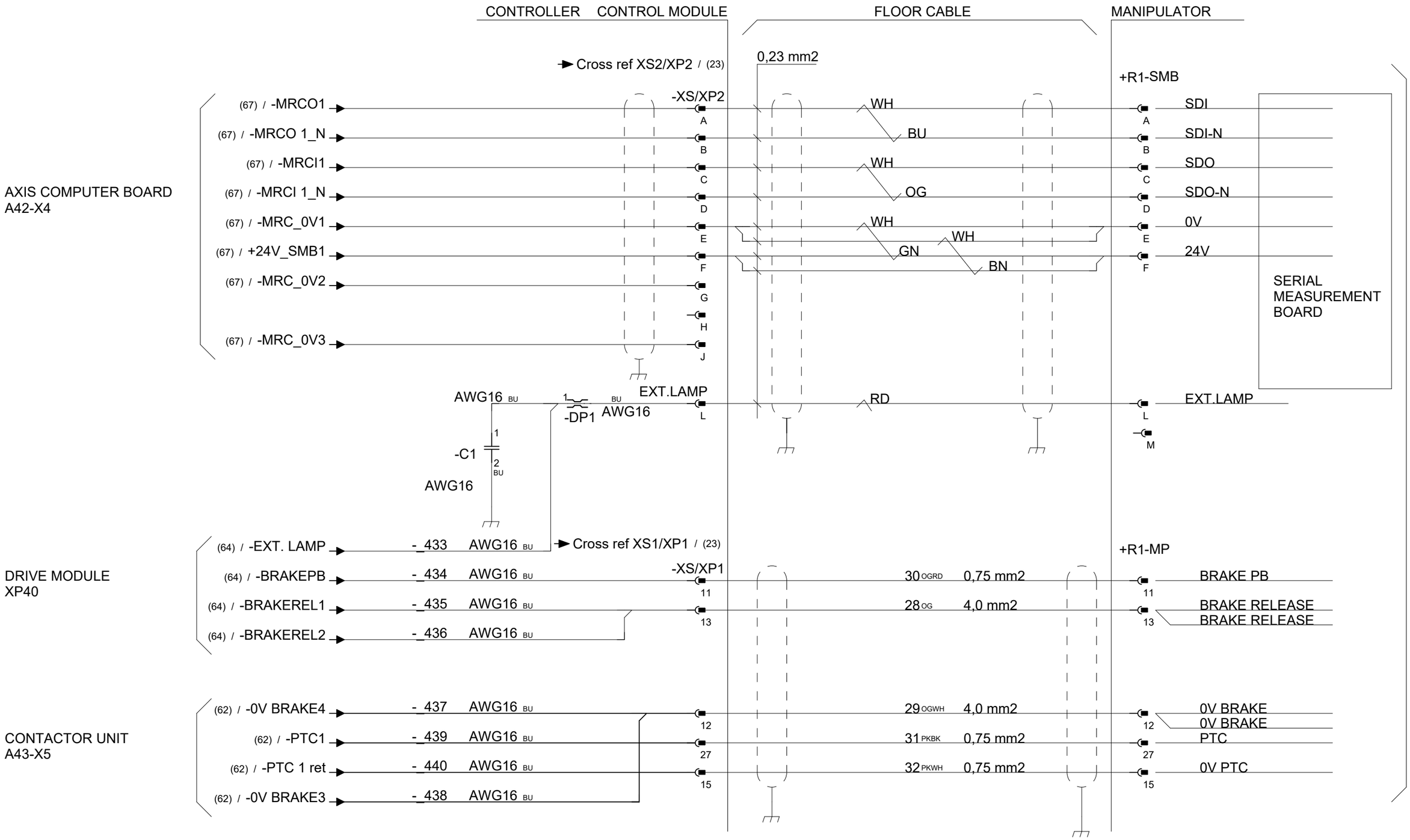

Latest revision:		Lab/Office: RA/RDP	IRC5 DESIGN Rel: 24:B CONTROL CABLE IRB 660, 760	Status: APPROVED	Plant: = Location: + Sublocation: +
				Document no. 3HAC024480-011	Rev. Ind 18
					Page 93 Next 93.5 Total 164
Prepared by, date: A Hägglund	Approved by, date: S Hällgren 2024-03-18				

We reserve all rights in this document and in the information contained therein. Reproduction, use or disclosure to third parties without express authority is strictly forbidden. © Copyright ABB

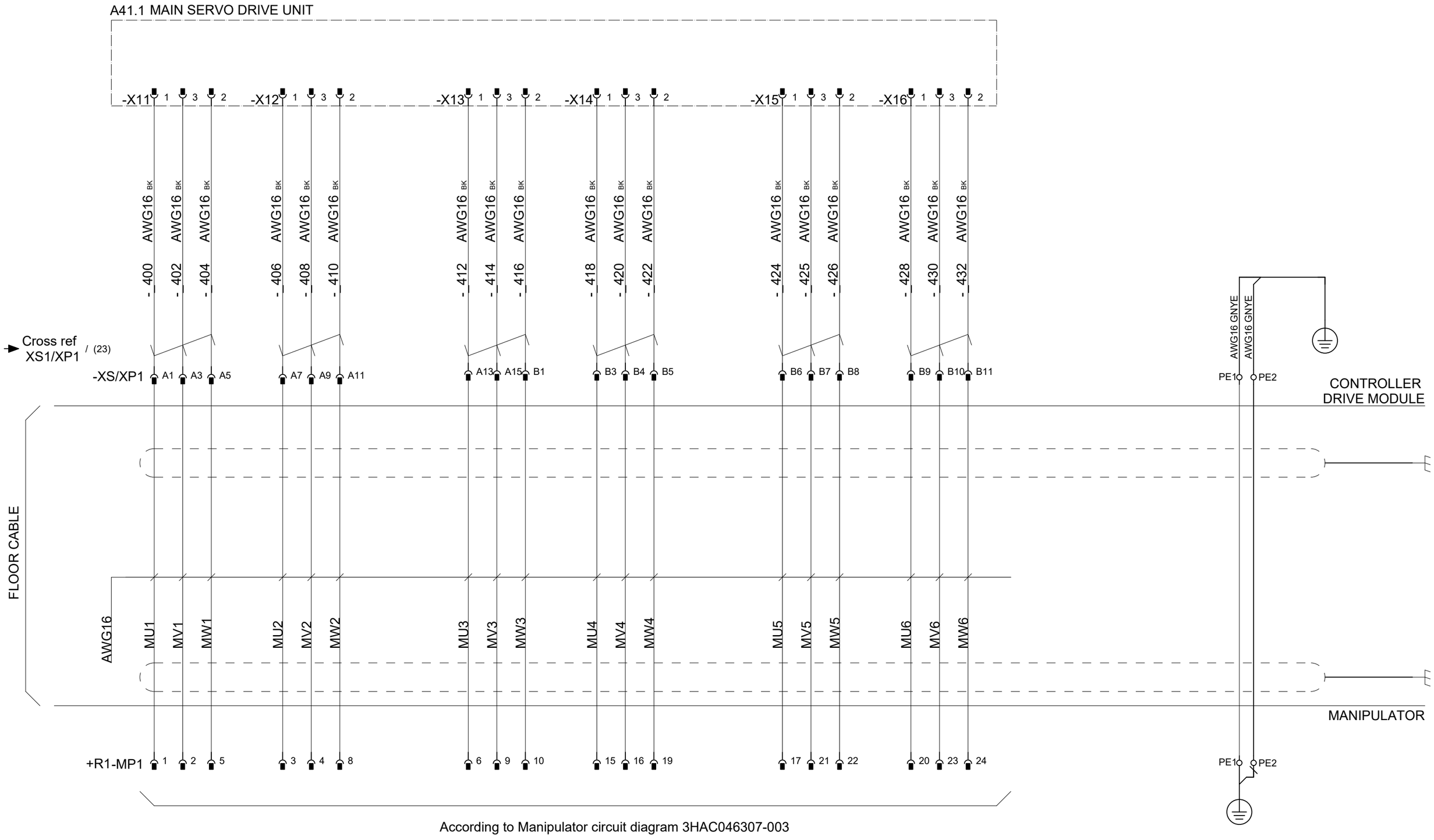

Latest revision:		ABB Lab/Office: RA/RDP	IRC5 DESIGN Rel: 24:B SERVO DRIVE SYSTEM IRB 1200	Status: APPROVED	Plant: = Location: + Sublocation: +	
Prepared by, date: A Hägglund	Approved by, date: S Hällgren 2024-03-18			Document no. 3HAC024480-011	Rev. Ind 18	Page 93.5 Next 93.6 Total 164

We reserve all rights in this document and in the information contained therein. Reproduction, use or disclosure to third parties without express authority is strictly forbidden. © Copyright ABB

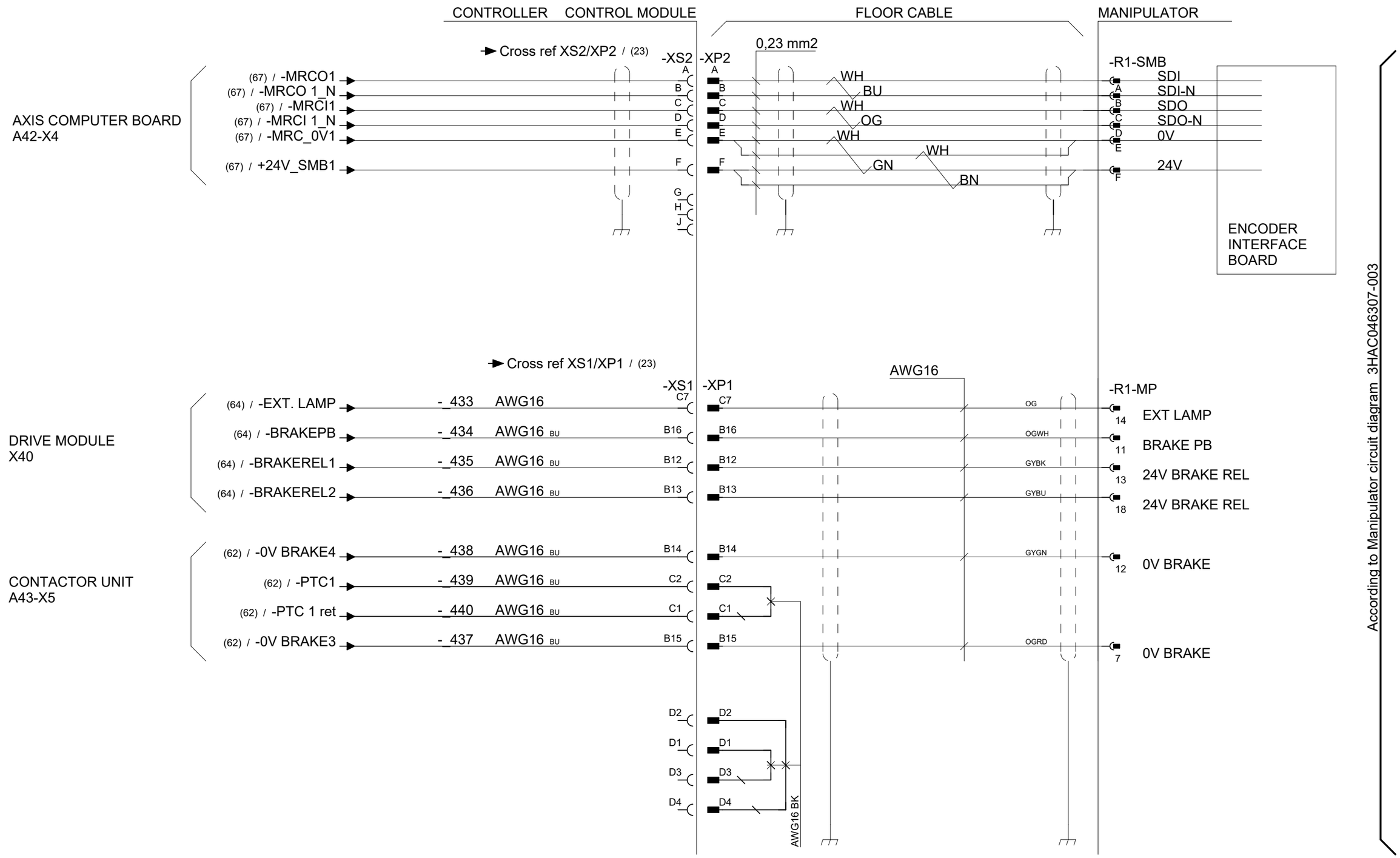

Latest revision:		Lab/Office: RA/RDP	IRC5 DESIGN Rel: 24:B CONTROL CABLE IRB 1200	Status: APPROVED	Plant: = Location: + Sublocation: +	
				Document no. 3HAC024480-011	Rev. Ind 18	Page 93.6 Next 93.7 Total 164
Prepared by, date: A Hägglund	Approved by, date: S Hällgren 2024-03-18					

We reserve all rights in this document and in the information contained therein. Reproduction, use or disclosure to third parties without express authority is strictly forbidden. © Copyright ABB

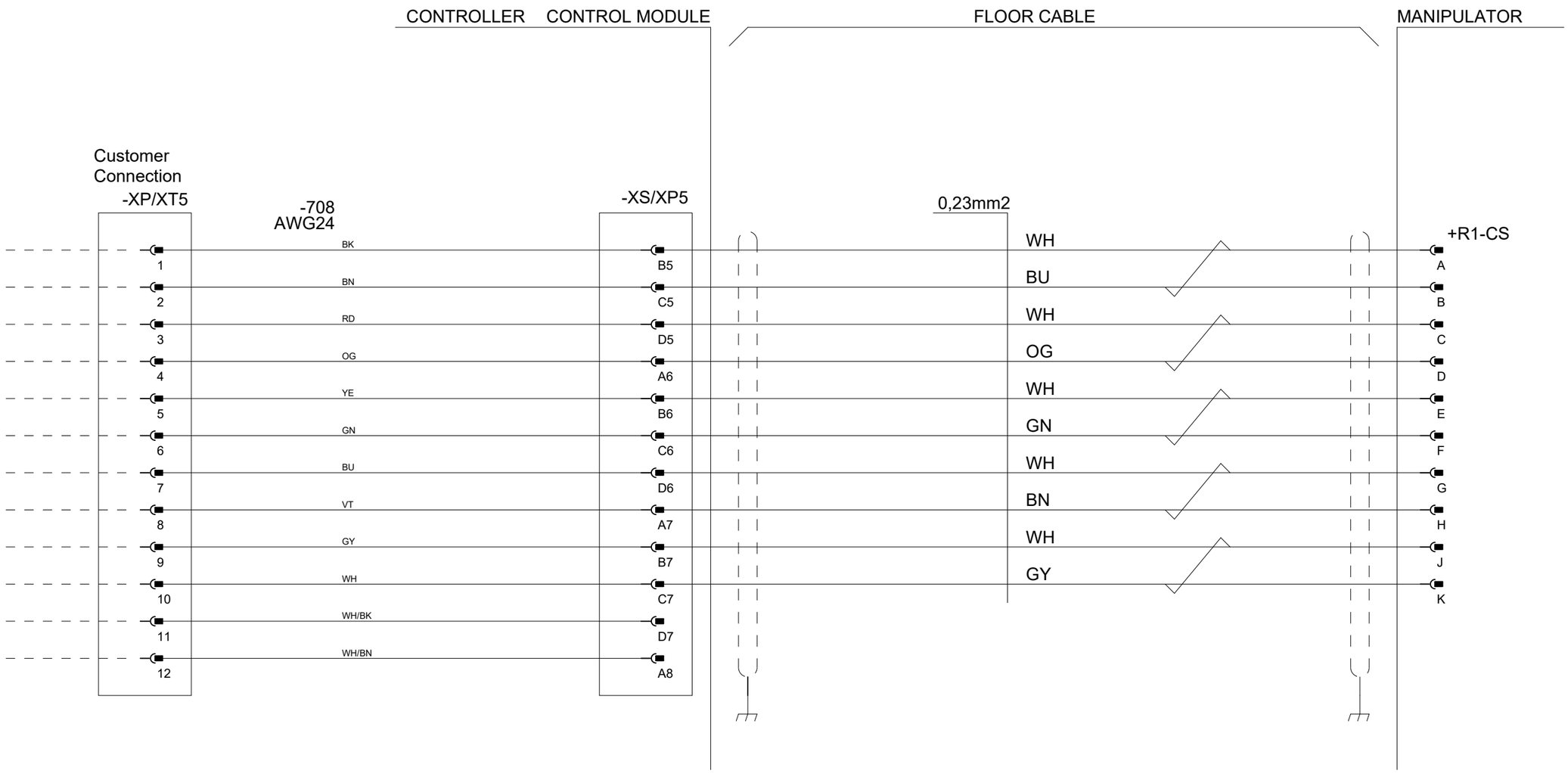

According to Manipulator circuit diagram 3HAC046307-003

Latest revision:		ABB	Lab/Office: RA/RDP	IRC5 DESIGN Rel: 24:B CUSTOMER SIGNAL SINGLE CABINET IRB 1200	Status: APPROVED	Plant: = Location: + Sublocation: +
Prepared by, date: A Hägglund	Approved by, date: S Hällgren 2024-03-18				Document no. 3HAC024480-011	Rev. Ind 18
						Page 93.7 Next 94 Total 164

We reserve all rights in this document and in the information contained therein. Reproduction, use or disclosure to third parties without express authority is strictly forbidden. © Copyright ABB

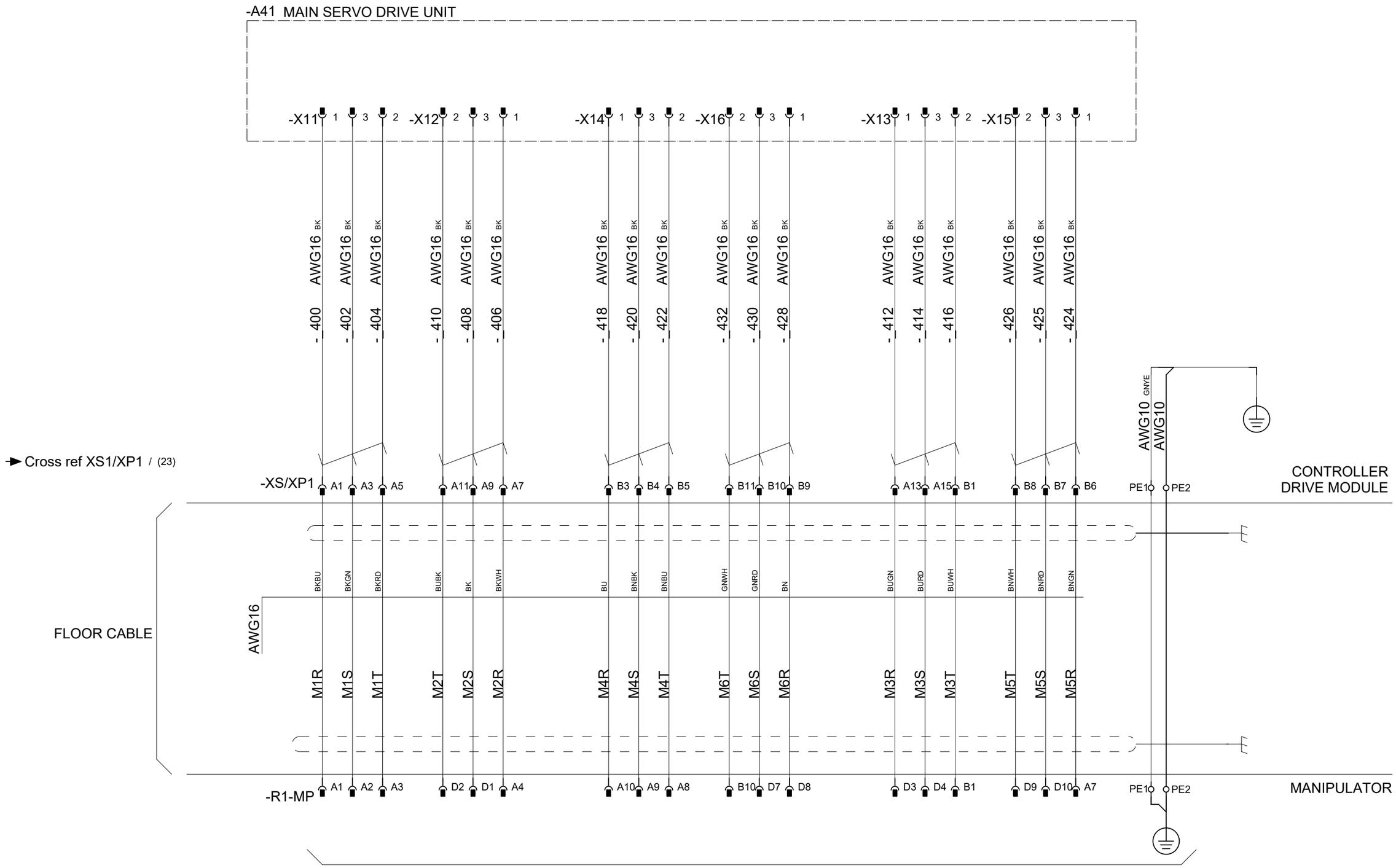

According to Manipulator circuit diagram 3HAC02803-3

Latest revision:		Lab/Office: RA/RDP	IRC5 DESIGN Rel: 24:B SERVO DRIVE SYSTEM IRB 1410	Status: APPROVED	Plant: = Location: + Sublocation: +	
				Document no. 3HAC024480-011	Rev. Ind 18	Page 94 Next 95 Total 164
Prepared by, date: A Hägglund	Approved by, date: S Hällgren 2024-03-18					

We reserve all rights in this document and in the information contained therein. Reproduction, use or disclosure to third parties without express authority is strictly forbidden. © Copyright ABB

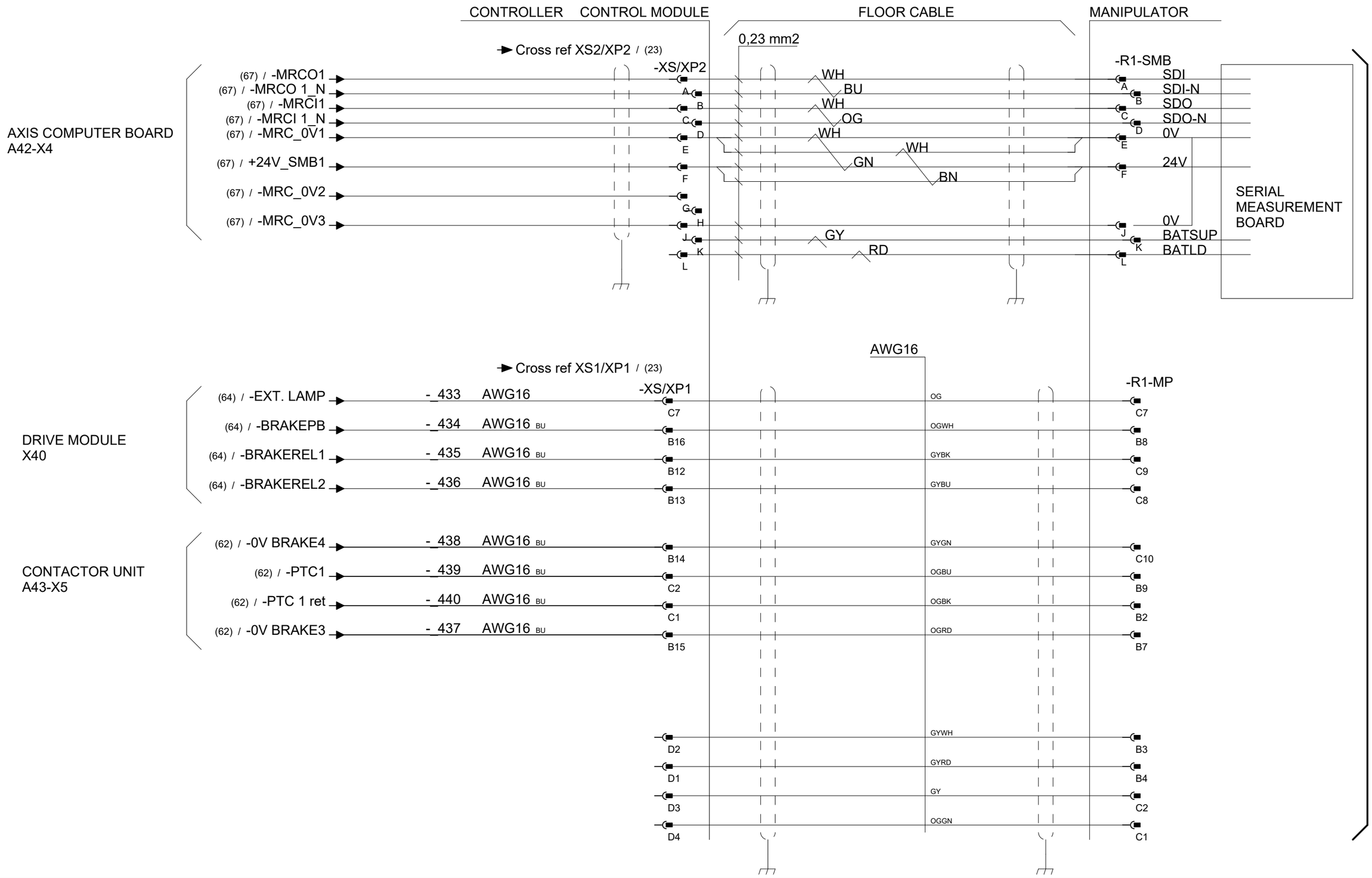

Latest revision:		Lab/Office: RA/RDP	IRC5 DESIGN Rel: 24:B CONTROL CABLE IRB 1410	Status: APPROVED	Plant: = Location: + Sublocation: +	
				Document no. 3HAC024480-011	Rev. Ind 18	Page 95 Next 96 Total 164
Prepared by, date: A Hägglund	Approved by, date: S Hällgren 2024-03-18					

We reserve all rights in this document and in the information contained therein. Reproduction, use or disclosure to third parties without express authority is strictly forbidden. © Copyright ABB

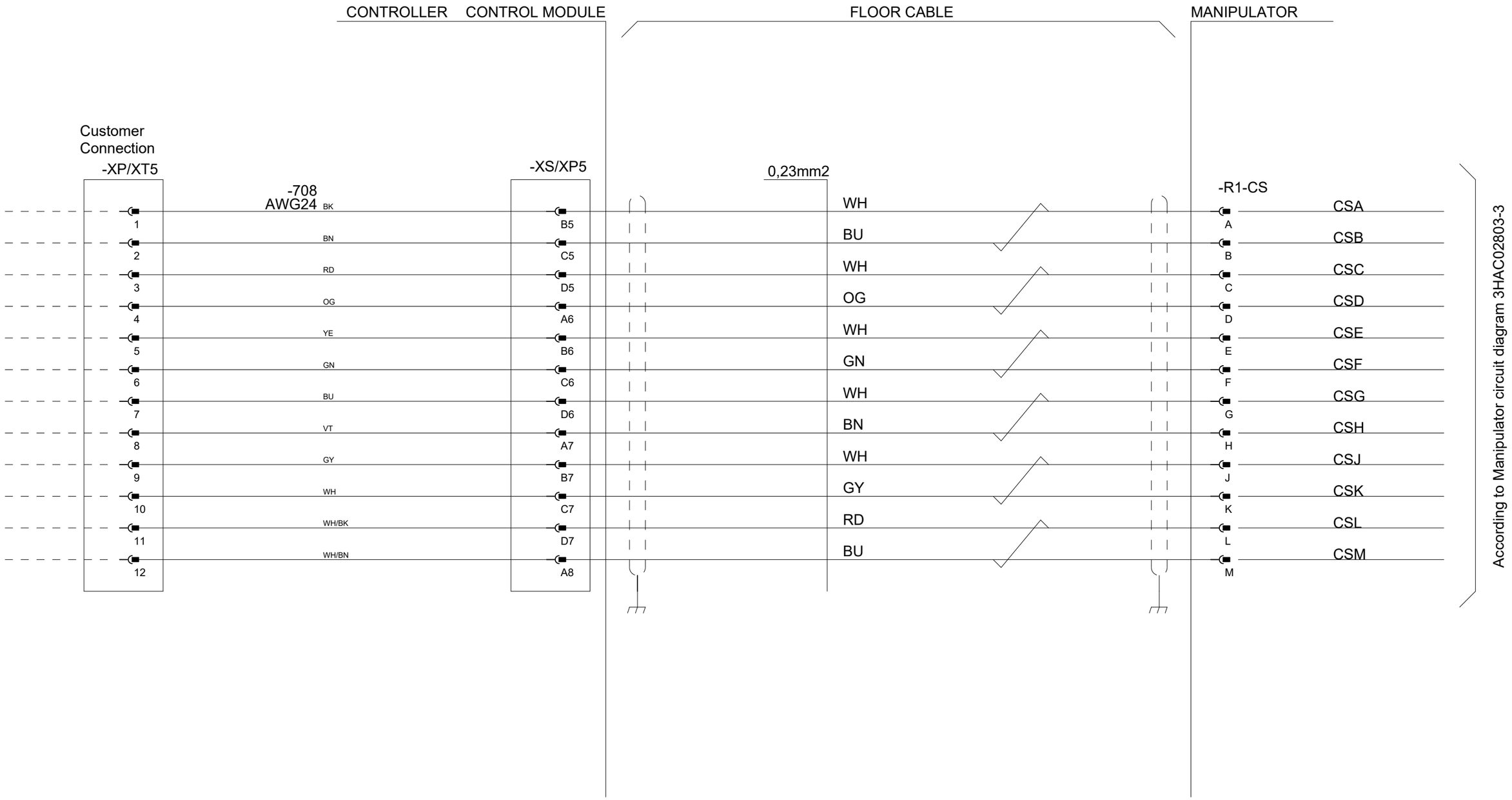

Latest revision:		ABB	Lab/Office: RA/RDP	IRC5 DESIGN Rel: 24:B CUSTOMER SIGNALS SINGLE CABINET IRB 1410	Status: APPROVED	Plant: = Location: + Sublocation: +
Prepared by, date: A Hägglund	Approved by, date: S Hällgren 2024-03-18				Document no. 3HAC024480-011	Rev. Ind 18

We reserve all rights in this document and in the information contained therein. Reproduction, use or disclosure to third parties without express authority is strictly forbidden. © Copyright ABB

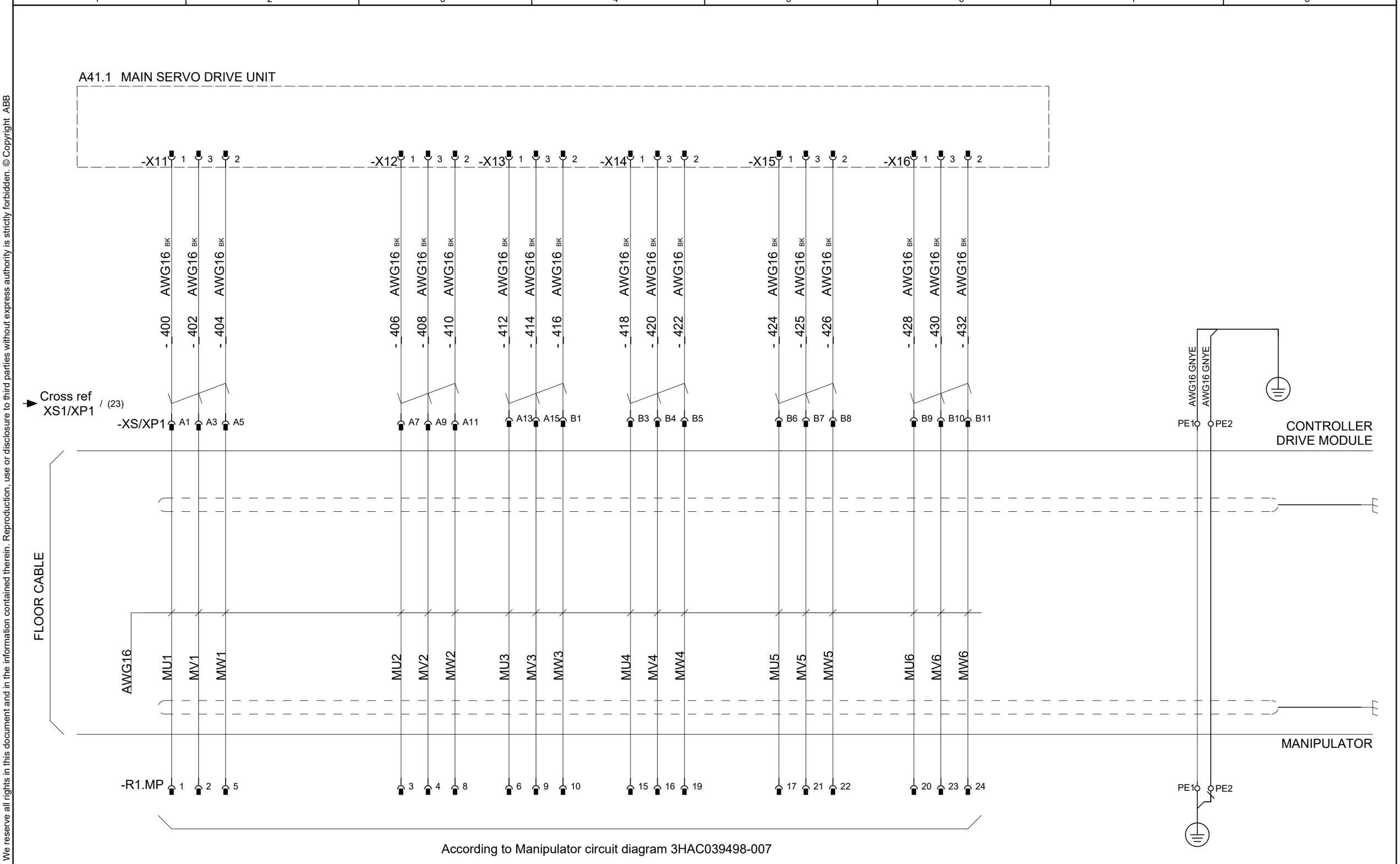

Latest revision:		Lab/Office: RA/RDP	IRC5 DESIGN Rel: 24:B SERVO DRIVE SYSTEM IRB 1520	Status: APPROVED	Plant: = Location: + Sublocation: +	
Prepared by, date: A Hägglund	Approved by, date: S Hällgren 2024-03-18			Document no. 3HAC024480-011	Rev. Ind 18	Page 97 Next 98 Total 164

We reserve all rights in this document and in the information contained therein. Reproduction, use or disclosure to third parties without express authority is strictly forbidden. © Copyright ABB

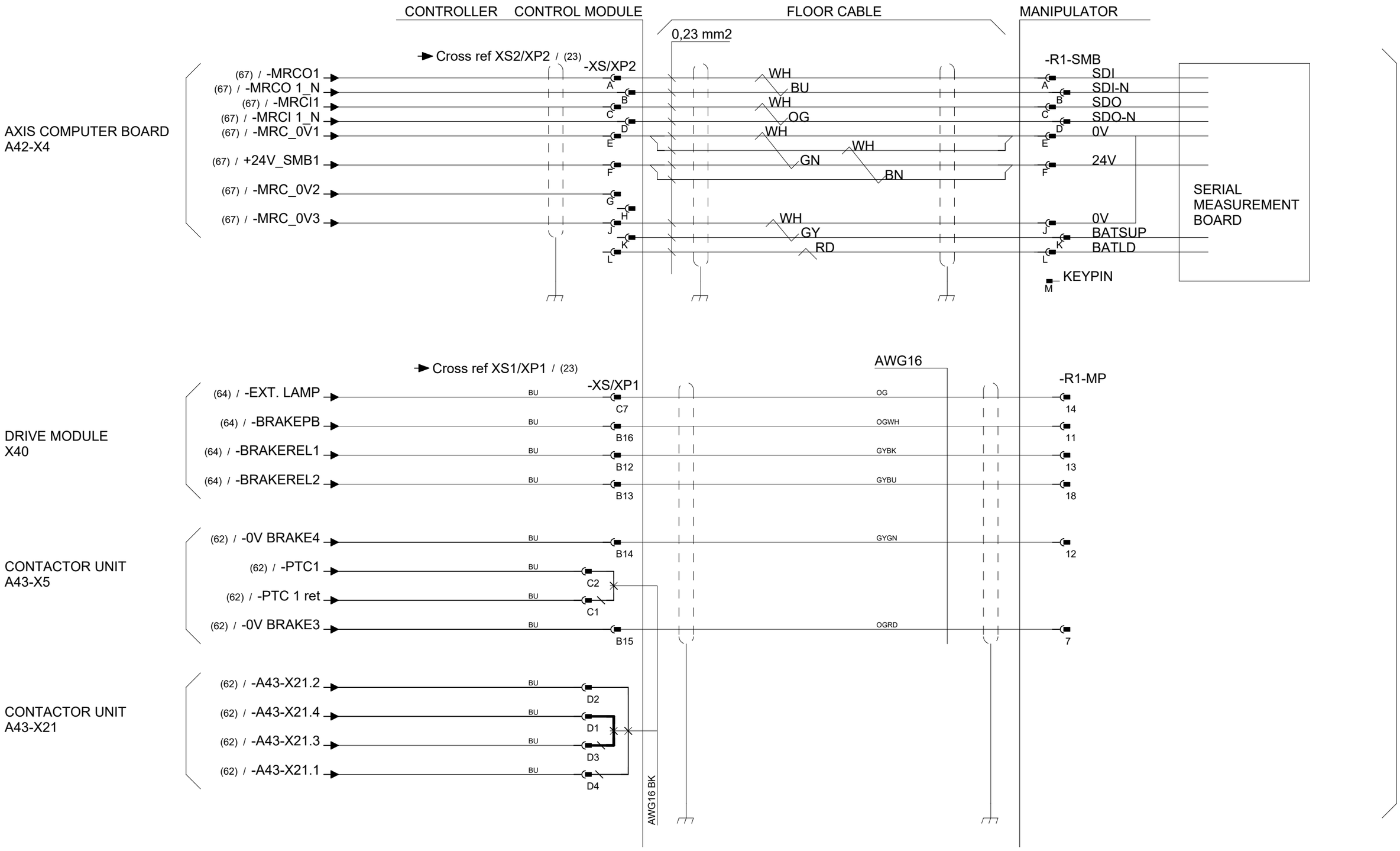

Latest revision:		ABB	Lab/Office: RA/RDP	IRC5 DESIGN Rel: 24:B CONTROL CABLE IRB 1520	Status: APPROVED	Plant: = Location: + Sublocation: +
Prepared by, date: A Hägglund	Approved by, date: S Hällgren 2024-03-18				Document no. 3HAC024480-011	Rev. Ind 18

We reserve all rights in this document and in the information contained therein. Reproduction, use or disclosure to third parties without express authority is strictly forbidden. © Copyright ABB

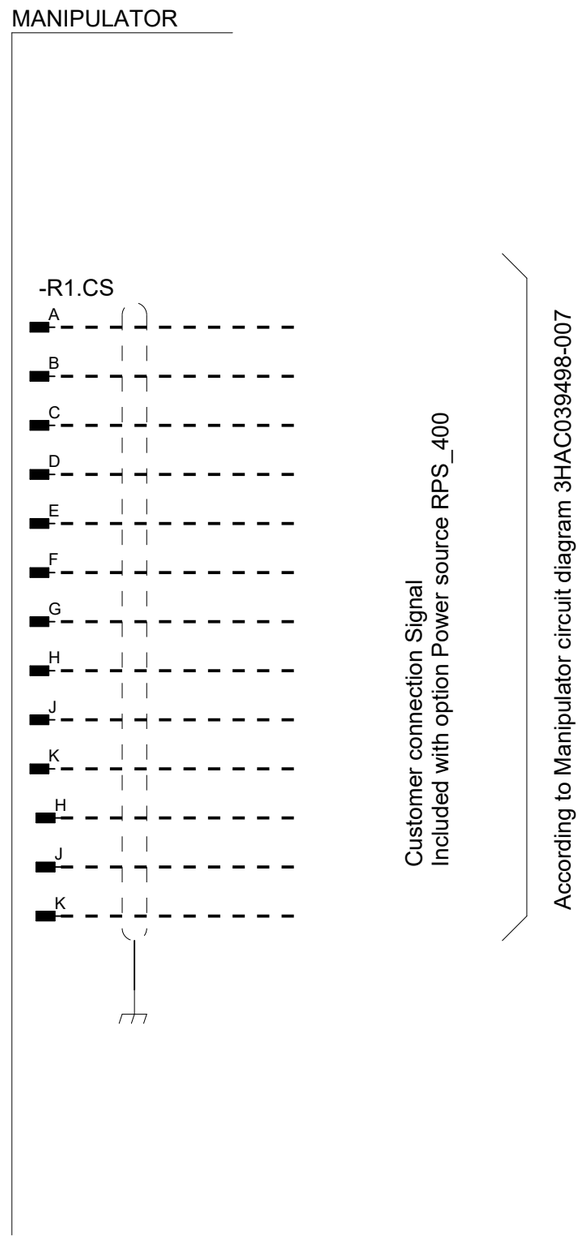

Latest revision:		ABB	Lab/Office: RA/RDP	IRC5 DESIGN Rel: 24:B CUSTOMER SIGNALS IRB 1520	Status: APPROVED	Plant: = Location: + Sublocation: +
Prepared by, date: A Hägglund	Approved by, date: S Hällgren 2024-03-18				Document no. 3HAC024480-011	Rev. Ind 18

We reserve all rights in this document and in the information contained therein. Reproduction, use or disclosure to third parties without express authority is strictly forbidden. © Copyright ABB

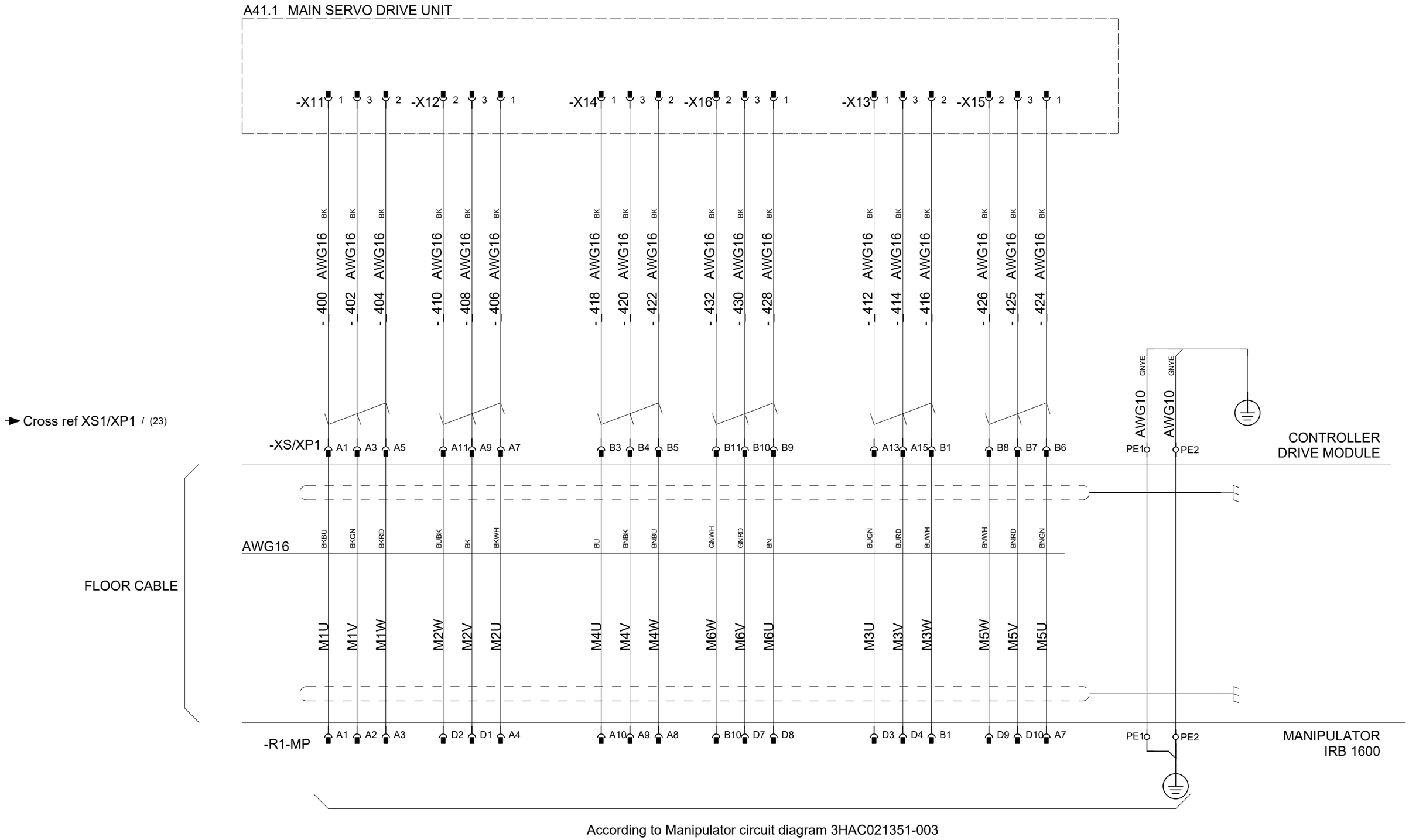

According to Manipulator circuit diagram 3HAC021351-003

Latest revision:		ABB	Lab/Office: RA/RDP	IRC5 DESIGN Rel: 24:B SERVO DRIVE UNIT IRB 1600/1660	Status: APPROVED	Plant: = Location: + Sublocation: +
Prepared by, date: A Hägglund	Approved by, date: S Hällgren 2024-03-18				Document no. 3HAC024480-011	Rev. Ind 18

We reserve all rights in this document and in the information contained therein. Reproduction, use or disclosure to third parties without express authority is strictly forbidden. © Copyright ABB

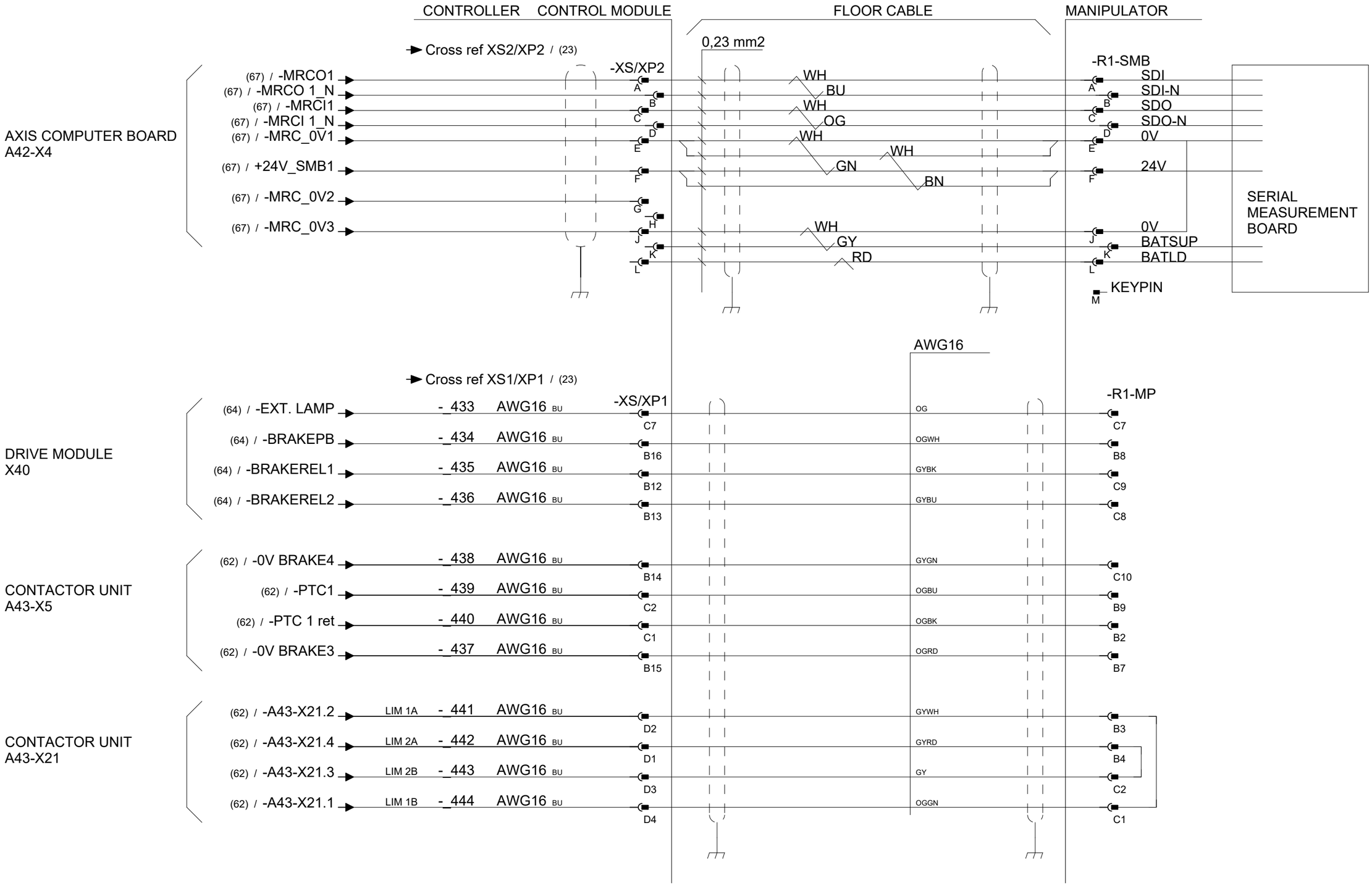

Latest revision:		Lab/Office: RA/RDP	IRC5 DESIGN Rel: 24:B CONTROL CABLE IRB 1600/1660	Status: APPROVED	Plant: = Location: + Sublocation: +
Prepared by, date: A Hägglund	Approved by, date: S Hällgren 2024-03-18			Document no. 3HAC024480-011	Rev. Ind 18
					Page 101 Next 102 Total 164

We reserve all rights in this document and in the information contained therein. Reproduction, use or disclosure to third parties without express authority is strictly forbidden. © Copyright ABB

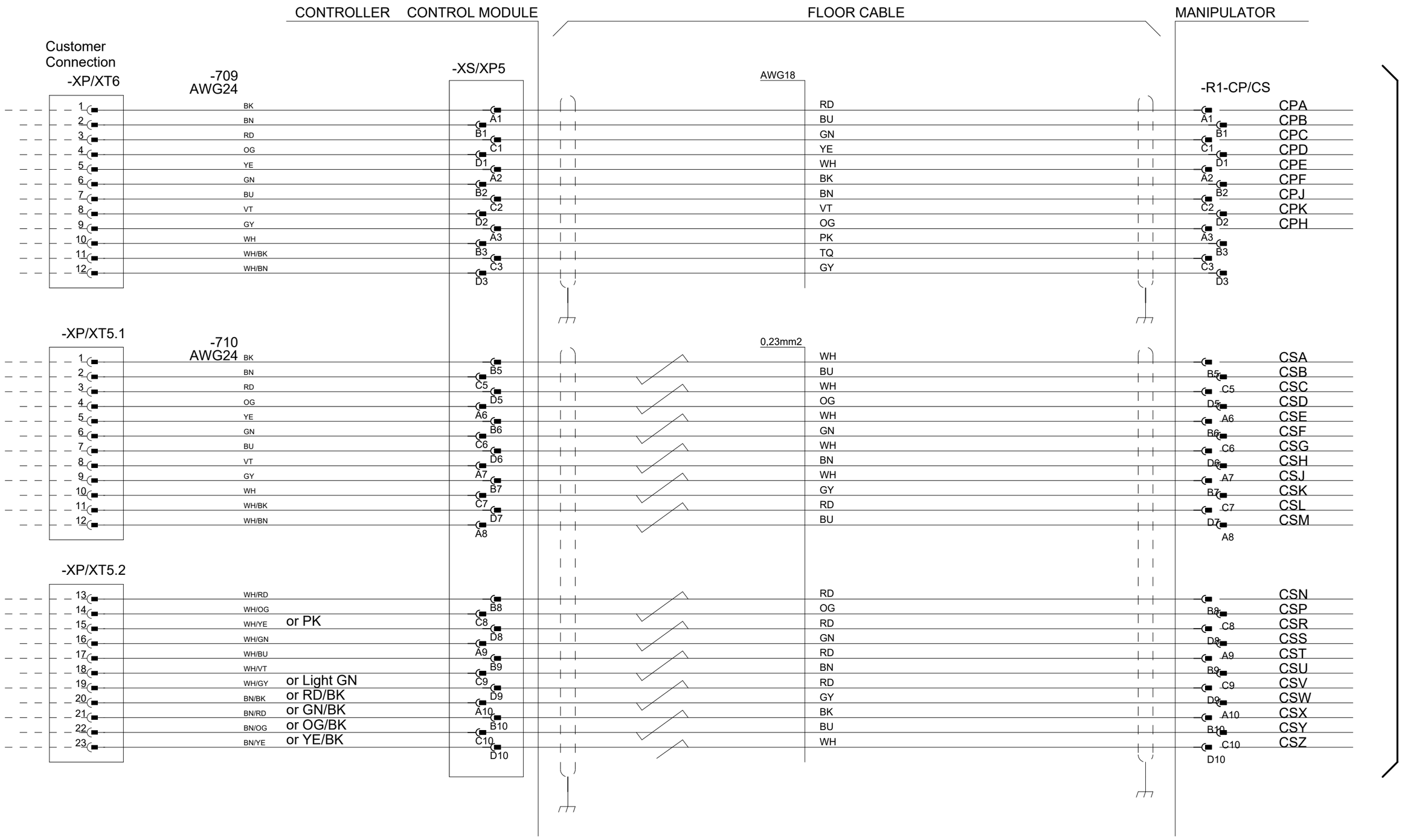

According to Manipulator circuit diagram 3HAC021351-003

Latest revision:		ABB	Lab/Office: RA/RDP	IRC5 DESIGN Rel: 24:B CUSTOMER POWER/SIGNAL SINGLE CABINET IRB 1600/1660	Status: APPROVED	Plant: = Location: + Sublocation: +
Prepared by, date: A Hägglund	Approved by, date: S Hällgren 2024-03-18				Document no. 3HAC024480-011	Rev. Ind 18

We reserve all rights in this document and in the information contained therein. Reproduction, use or disclosure to third parties without express authority is strictly forbidden. © Copyright ABB

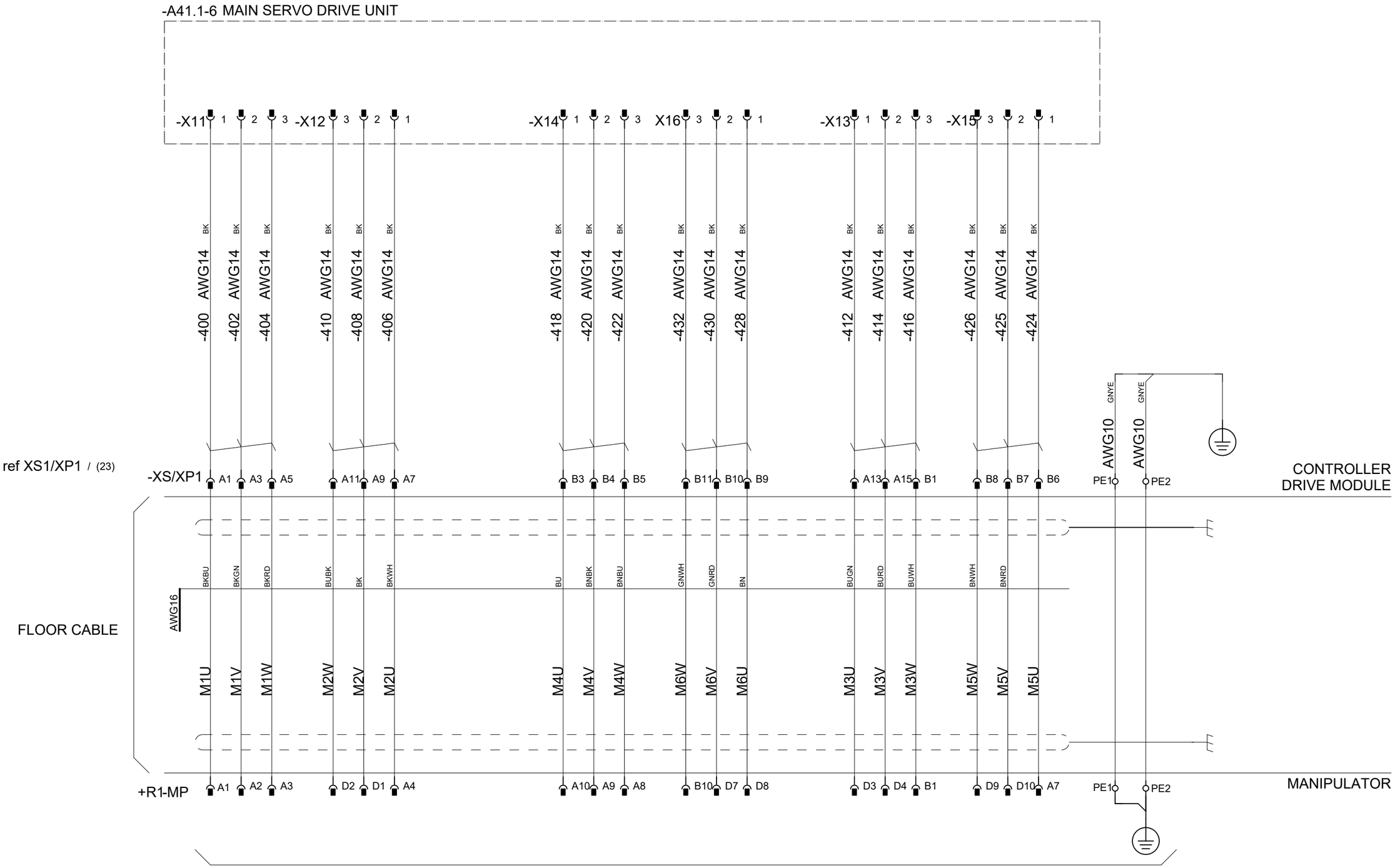

According to Manipulator circuit diagram 3HAC6670-3

Latest revision:		Lab/Office: RA/RDP	IRC5 DESIGN Rel: 24:B SERVO DRIVE UNIT IRB 2400	Status: APPROVED	Plant: = Location: + Sublocation: +
Prepared by, date: A Hägglund	Approved by, date: S Hällgren 2024-03-18			Document no. 3HAC024480-011	Rev. Ind 18
					Page 103 Next 104 Total 164

We reserve all rights in this document and in the information contained therein. Reproduction, use or disclosure to third parties without express authority is strictly forbidden. © Copyright ABB

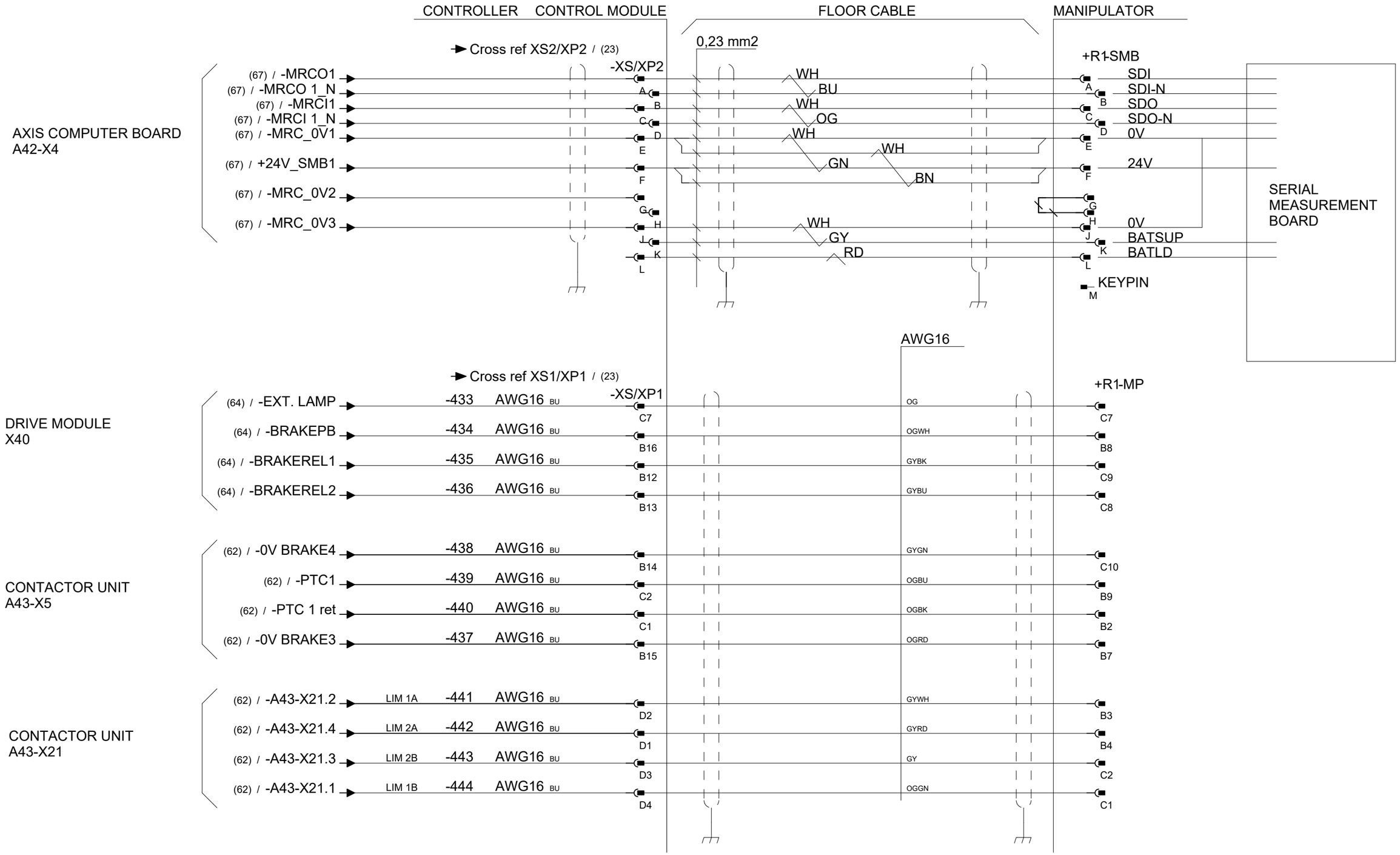

Latest revision:		Lab/Office: RA/RDP	IRC5 DESIGN Rel: 24:B CONTROL CABLE IRB 2400	Status: APPROVED	Plant: = Location: + Sublocation: +
				Document no. 3HAC024480-011	Rev. Ind 18
Prepared by, date: A Hägglund	Approved by, date: S Hällgren 2024-03-18				Page 104 Next 105 Total 164

We reserve all rights in this document and in the information contained therein. Reproduction, use or disclosure to third parties without express authority is strictly forbidden. © Copyright ABB

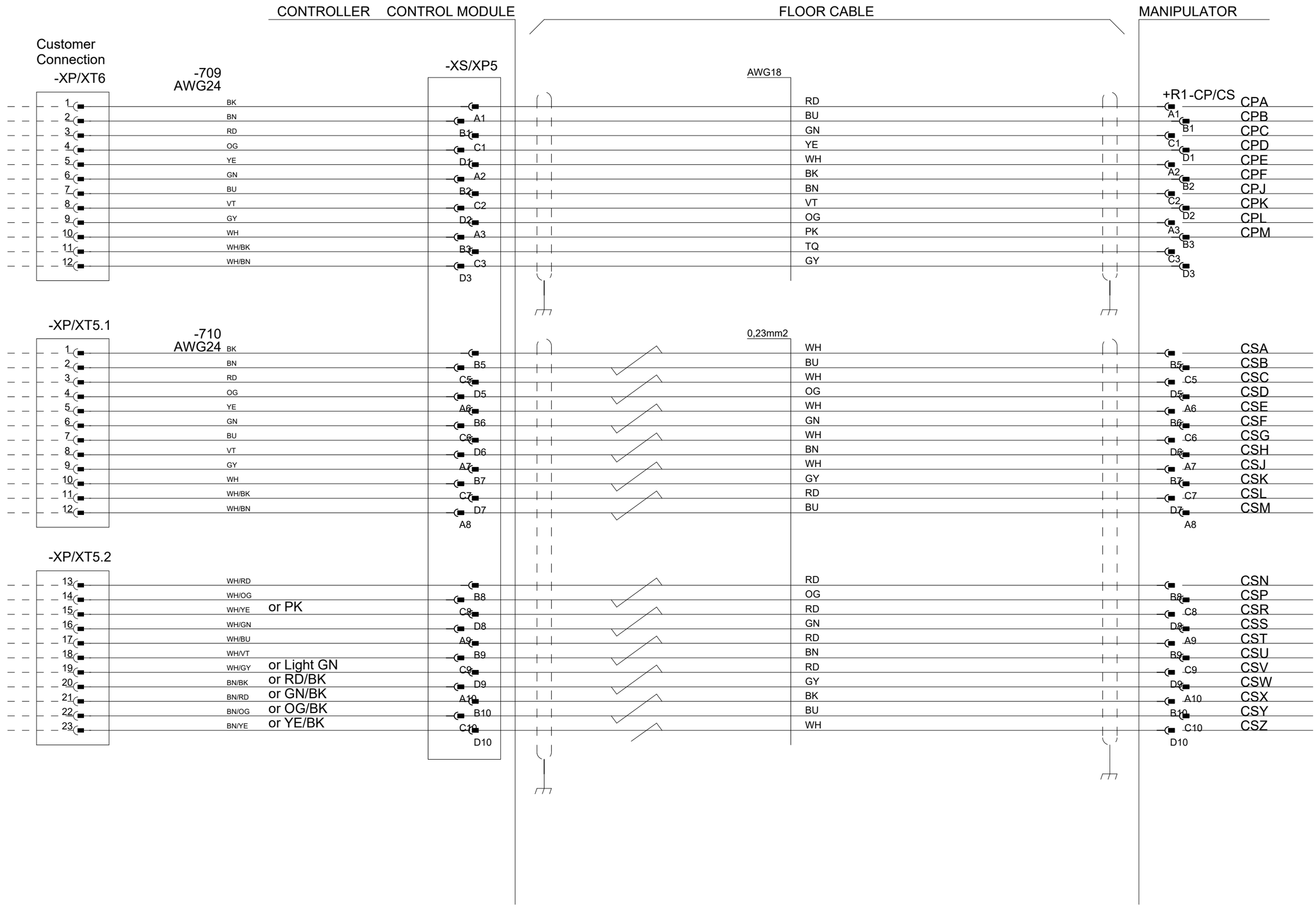

Latest revision:		Lab/Office: RA/RDP	IRC5 DESIGN Rel: 24:B CUSTOMER POWER/SIGNAL SINGLE CABINET IRB 2400	Status: APPROVED	Plant: = Location: + Sublocation: +
Prepared by, date: A Hägglund	Approved by, date: S Hällgren 2024-03-18			Document no. 3HAC024480-011	Rev. Ind 18

We reserve all rights in this document and in the information contained therein. Reproduction, use or disclosure to third parties without express authority is strictly forbidden. © Copyright ABB

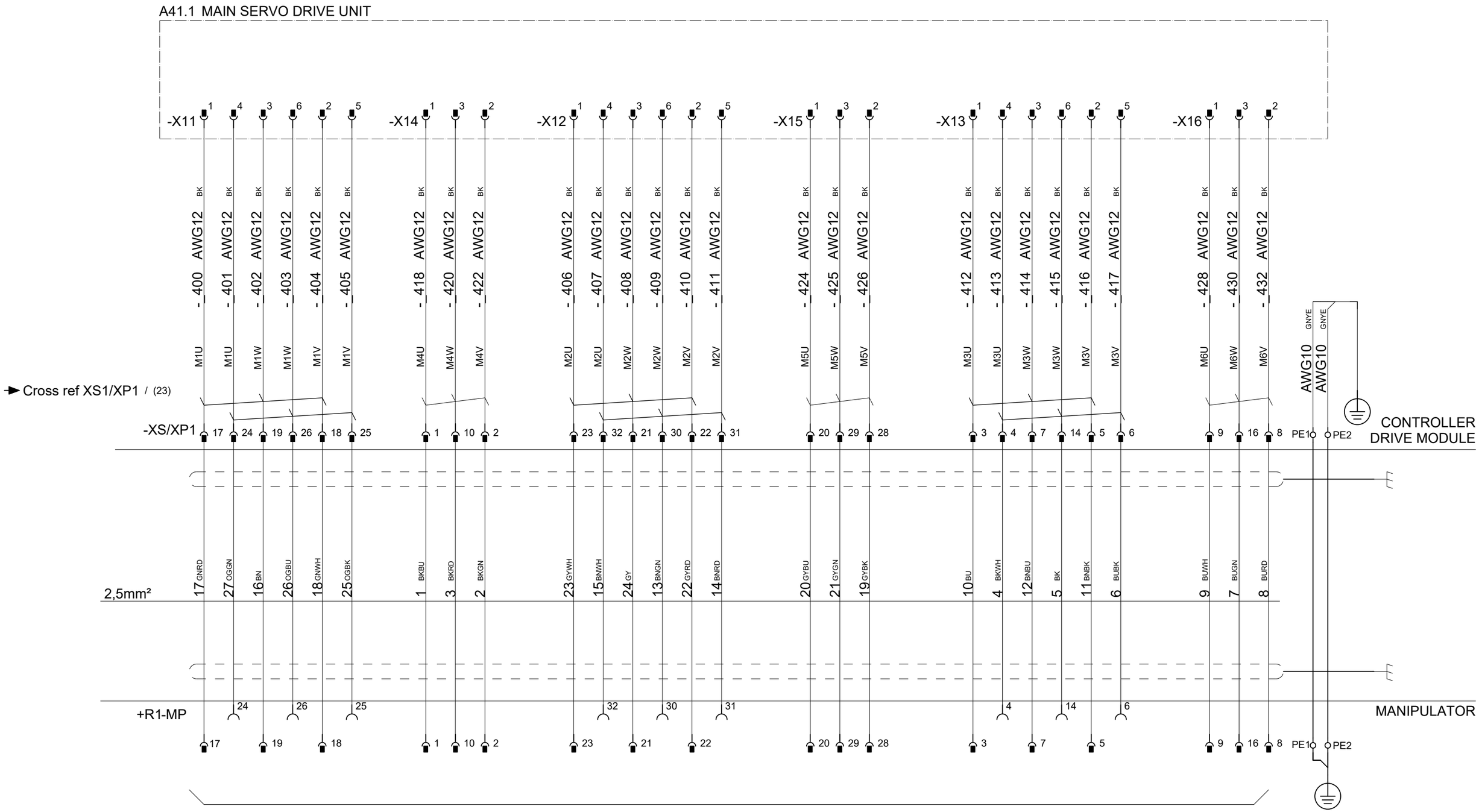

According to Manipulator circuit diagram 3HAC029570-007

Latest revision:		Lab/Office: RA/RDP	IRC5 DESIGN Rel: 24:B SERVO DRIVE SYSTEM IRB 2600	Status: APPROVED	Plant: = Location: + Sublocation: +	
				Document no. 3HAC024480-011	Rev. Ind 18	Page 106 Next 107 Total 164
Prepared by, date: A Hägglund	Approved by, date: S Hällgren 2024-03-18					

We reserve all rights in this document and in the information contained therein. Reproduction, use or disclosure to third parties without express authority is strictly forbidden. © Copyright ABB

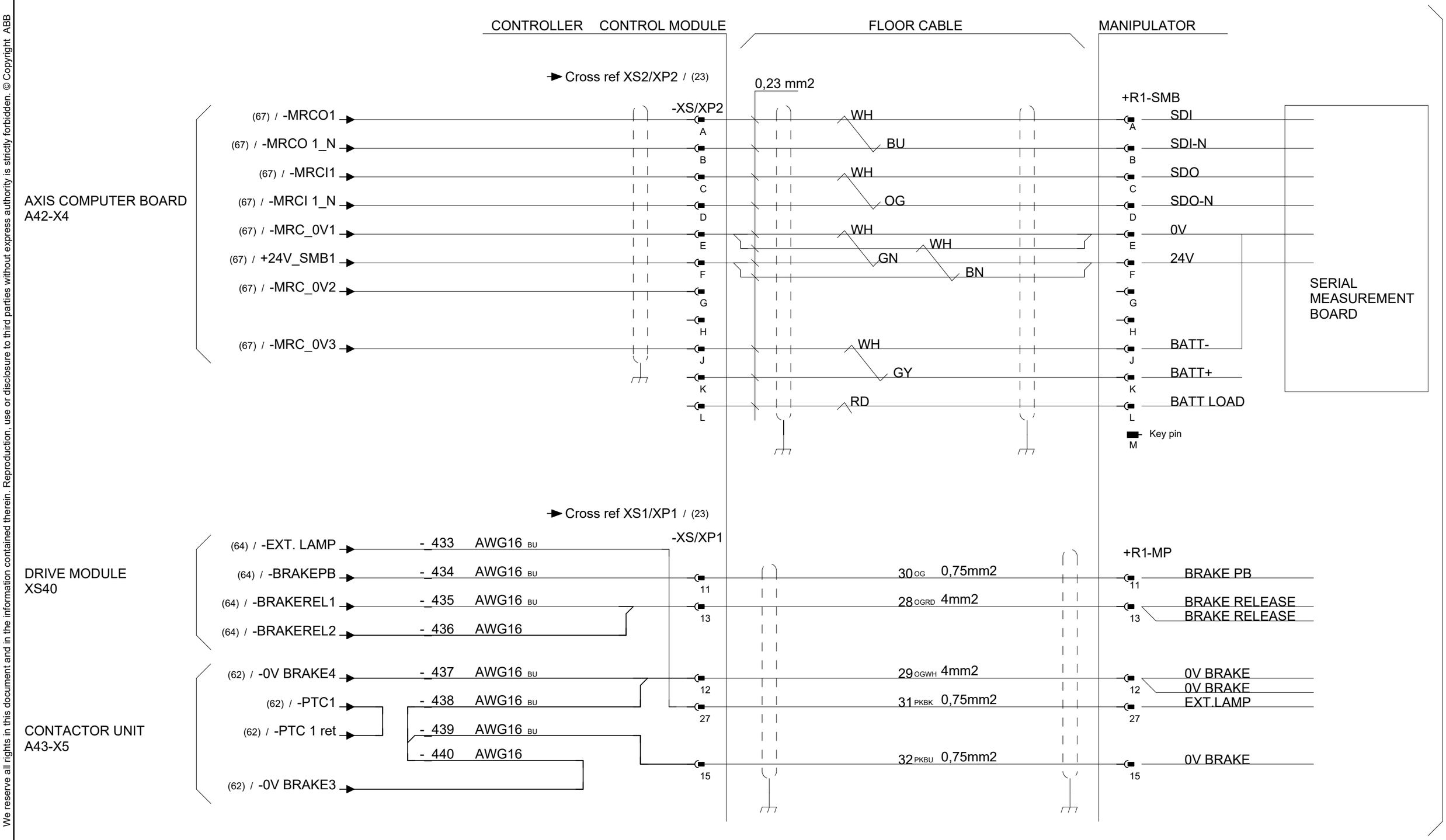

According to Manipulator diagram 3HAC029570-007

Latest revision:		ABB	Lab/Office: RA/RDP	IRC5 DESIGN Rel: 24:B CONTROL CABLE IRB 2600	Status: APPROVED	Plant: = Location: + Sublocation: +
Prepared by, date: A Hägglund	Approved by, date: S Hällgren 2024-03-18				Document no. 3HAC024480-011	Rev. Ind 18

We reserve all rights in this document and in the information contained therein. Reproduction, use or disclosure to third parties without express authority is strictly forbidden. © Copyright ABB

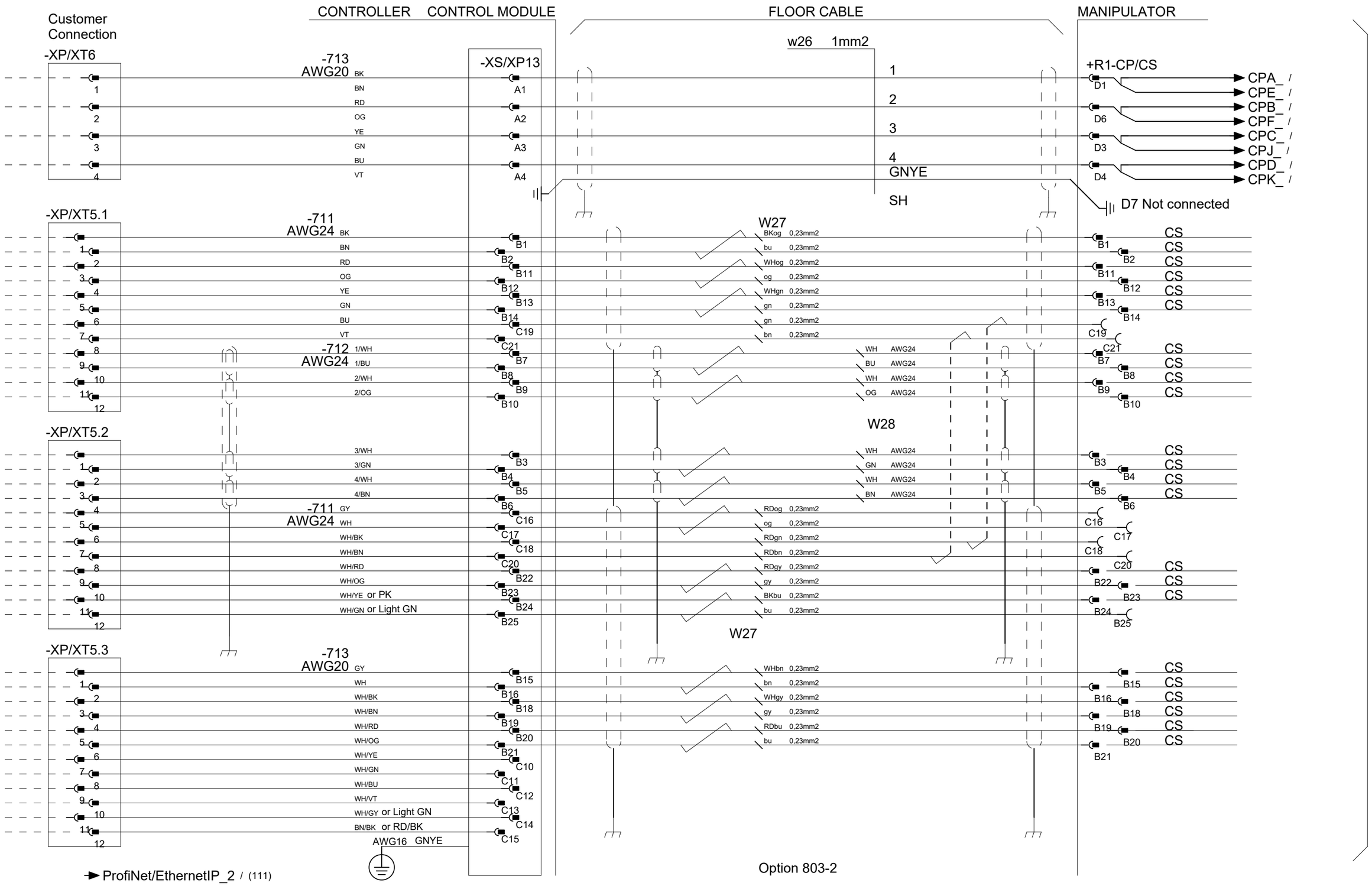

Latest revision:		Lab/Office: RA/RDP	IRC5 DESIGN Rel: 24:B CUSTOMER POWER/SIGNAL PROFINET IRB2600	Status: APPROVED	Plant: = Location: + Sublocation: +
Prepared by, date: A Hägglund	Approved by, date: S Hällgren 2024-03-18			Document no. 3HAC024480-011	Rev. Ind 18

We reserve all rights in this document and in the information contained therein. Reproduction, use or disclosure to third parties without express authority is strictly forbidden. © Copyright ABB

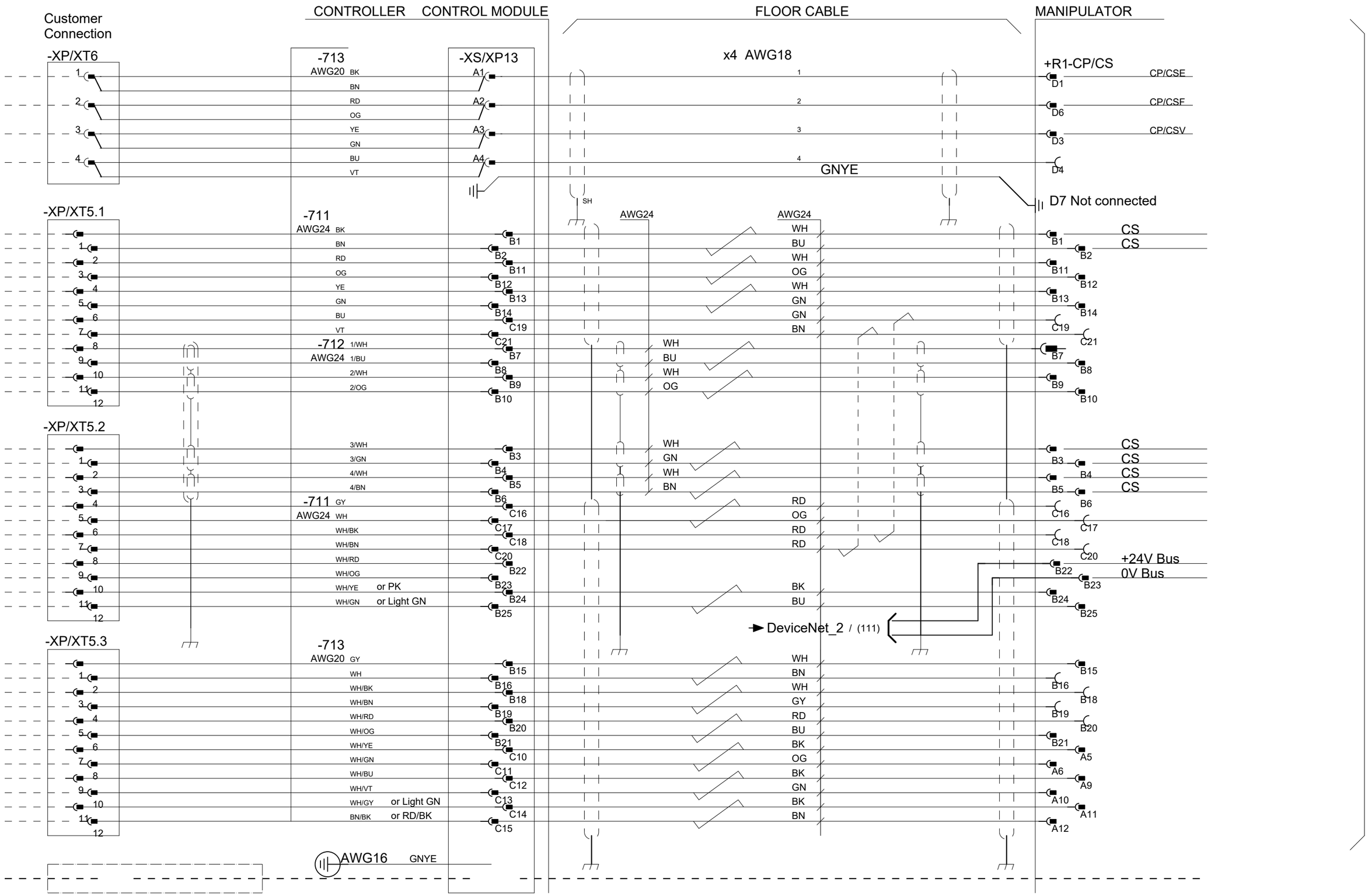

Latest revision:

Prepared by, date: A Hägglund | Approved by, date: S Hällgren 2024-03-18

ABB | Lab/Office: RA/RDP

IRC5 DESIGN Rel: 24:B
CUSTOMER POWER/SIGNAL
DEVICE NET
IRB2600

Status: APPROVED

Plant: =
Location: +
Sublocation: +

Document no. 3HAC024480-011

Rev. Ind 18

We reserve all rights in this document and in the information contained therein. Reproduction, use or disclosure to third parties without express authority is strictly forbidden. © Copyright ABB

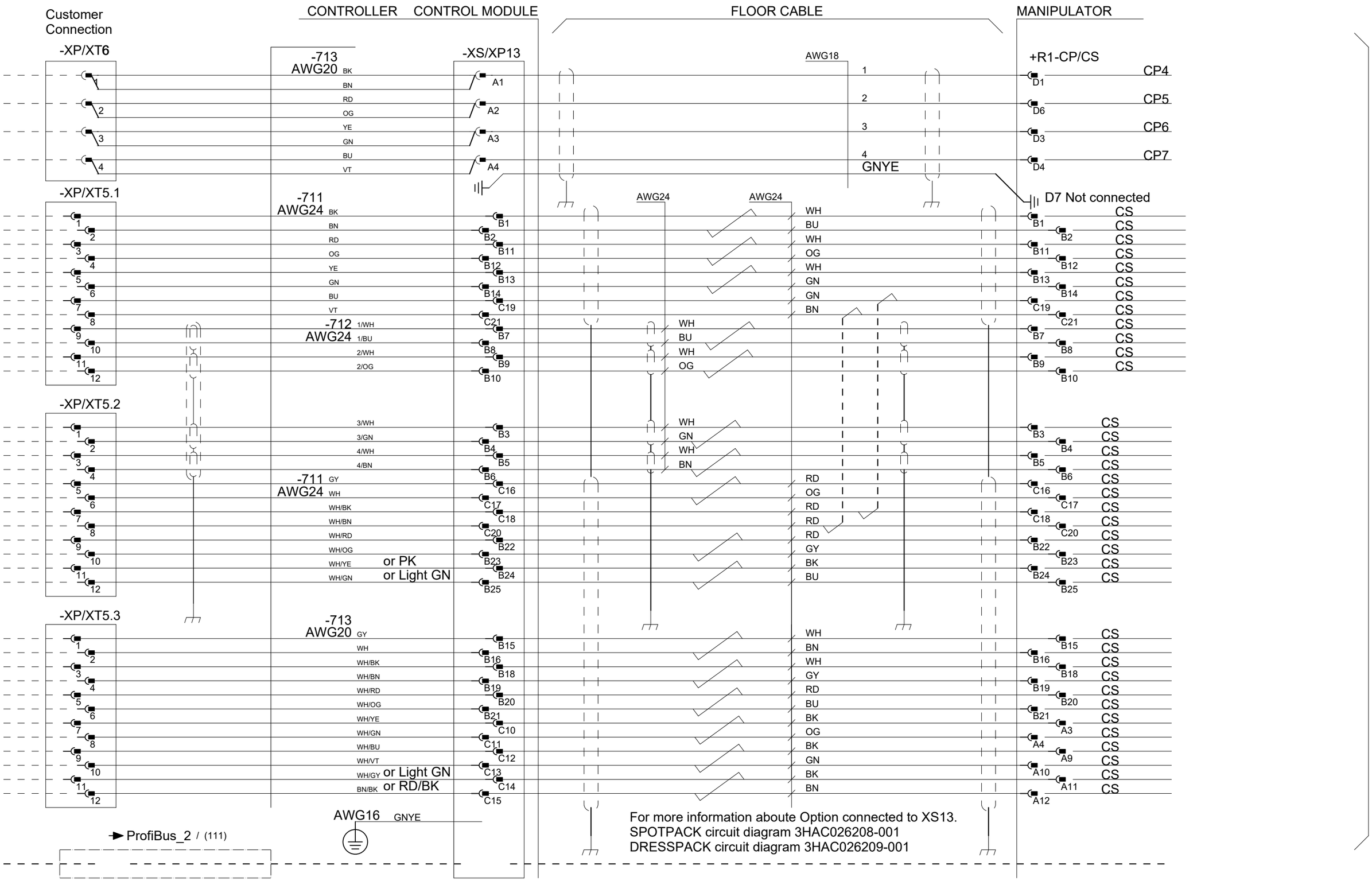

Latest revision:		Lab/Office: RA/RDP	IRC5 DESIGN Rel: 24:B CUSTOMER POWER/SIGNAL PROFI BUS IRB 2600	Status: APPROVED	Plant: = Location: + Sublocation: +
Prepared by, date: A Hägglund	Approved by, date: S Hällgren 2024-03-18			Document no. 3HAC024480-011	Rev. Ind 18
					Page 110 Next 111 Total 164

We reserve all rights in this document and in the information contained therein. Reproduction, use or disclosure to third parties without express authority is strictly forbidden. © Copyright ABB

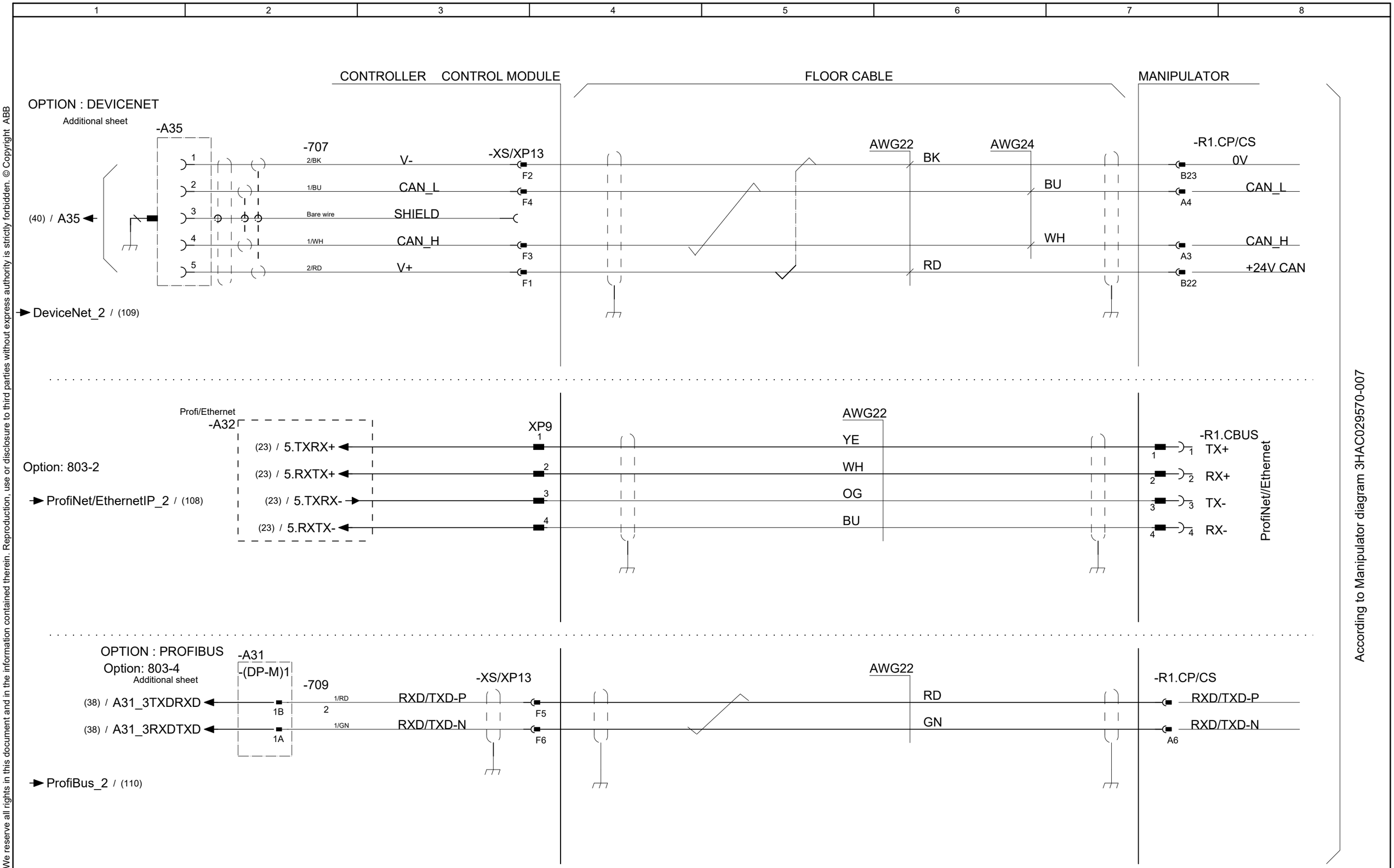

Latest revision:		Lab/Office: RA/RDP	IRC5 DESIGN Rel: 24:B DevNet/PofiNet/Ethernet/Profibus addition to CP/CS IRB2600	Status: APPROVED	Plant: = Location: + Sublocation: +
Prepared by, date: A Hägglund	Approved by, date: S Hällgren 2024-03-18			Document no. 3HAC024480-011	Rev. Ind 18

We reserve all rights in this document and in the information contained therein. Reproduction, use or disclosure to third parties without express authority is strictly forbidden. © Copyright ABB

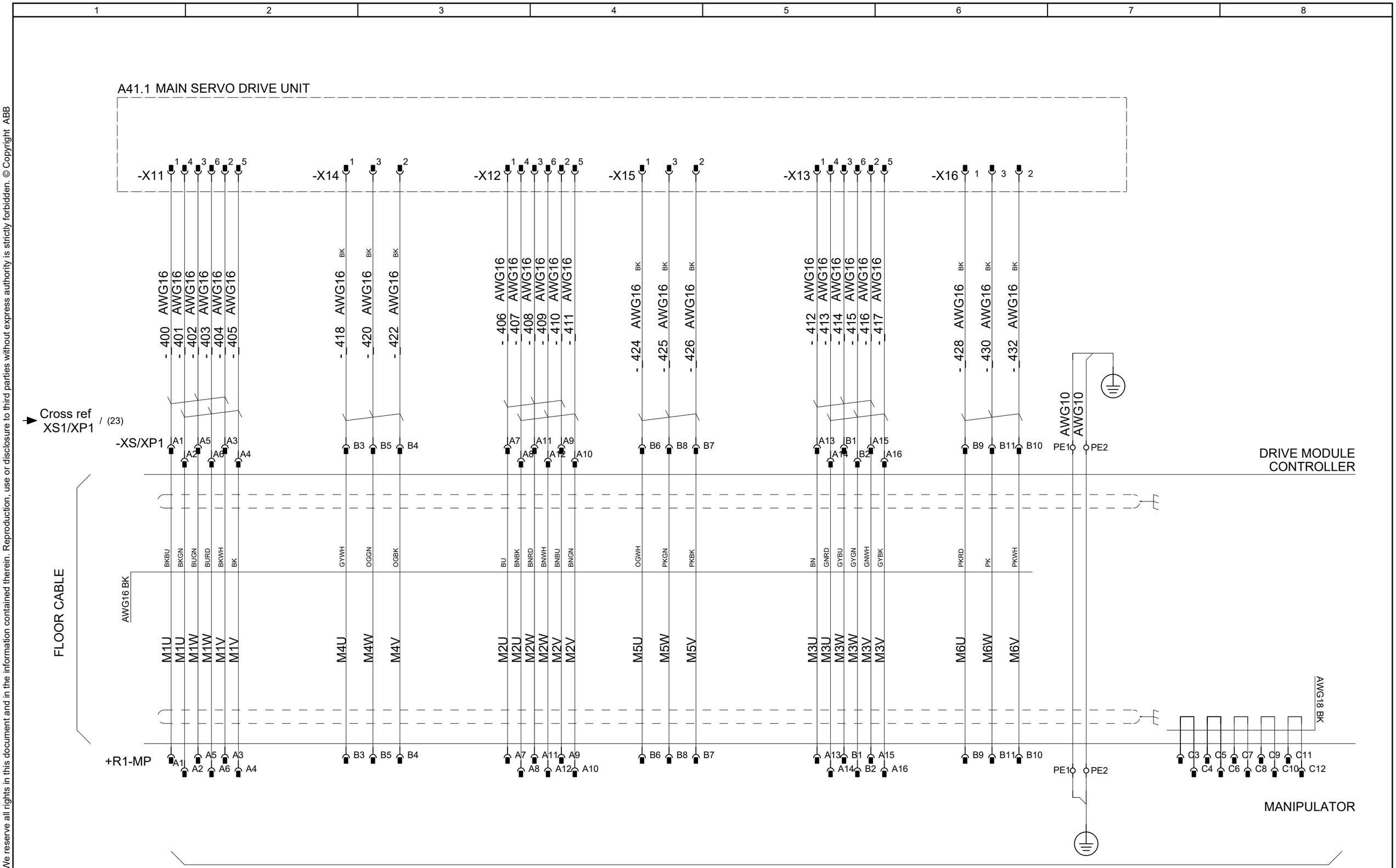

Latest revision:		ABB	Lab/Office: RA/RDP	IRC5 DESIGN Rel: 24:B SERVO DRIVE SYSTEM IRB 4400	Status: APPROVED Plant: = Location: + Sublocation: +
Prepared by, date: A Hägglund	Approved by, date: S Hällgren 2024-03-18				Document no. 3HAC024480-011 Rev. Ind 18 Page 112 Next 113 Total 164

We reserve all rights in this document and in the information contained therein. Reproduction, use or disclosure to third parties without express authority is strictly forbidden. © Copyright ABB

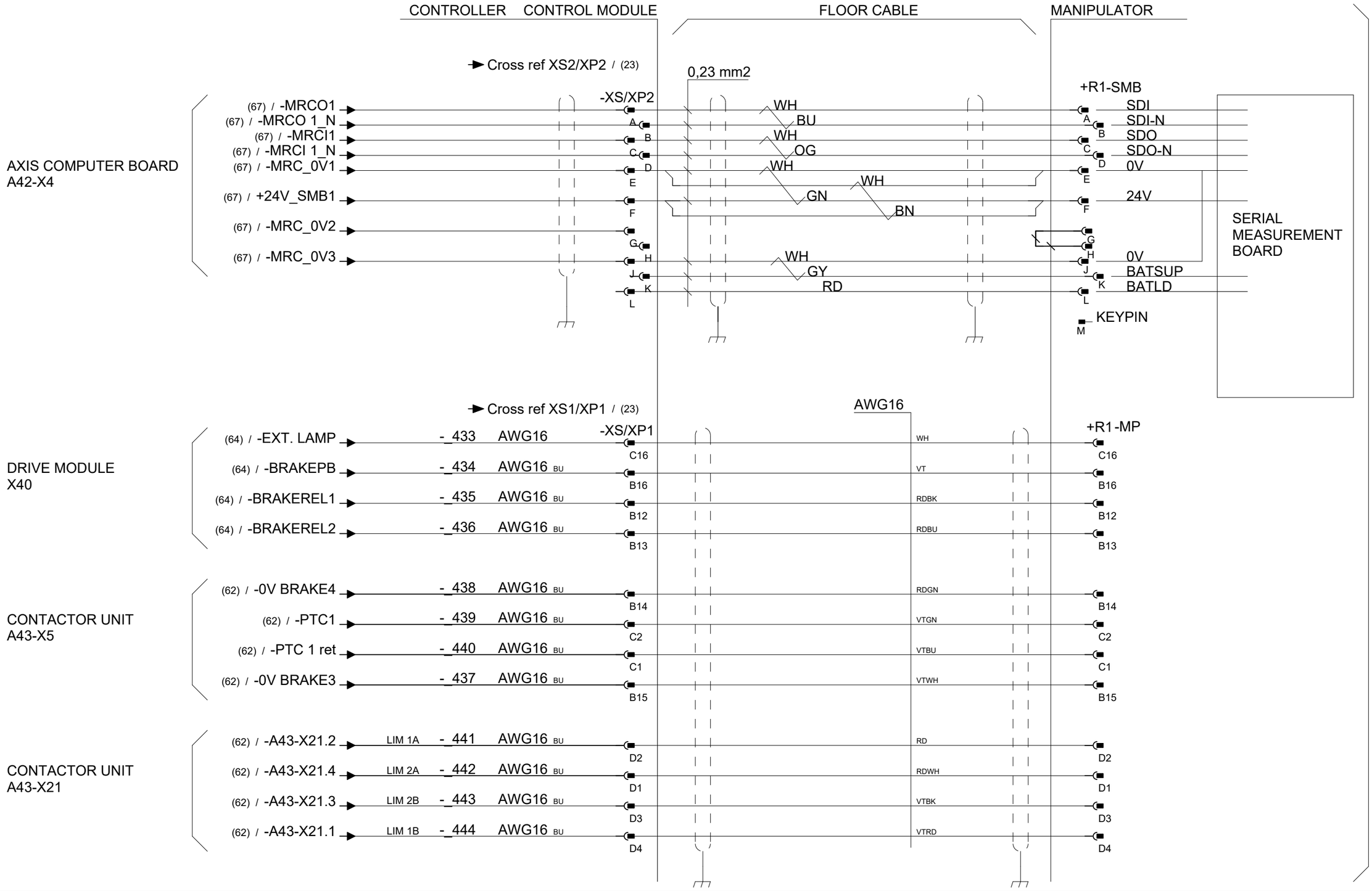

Latest revision:		Lab/Office: RA/RDP	IRC5 DESIGN Rel: 24:B CONTROL CABLE IRB 4400	Status: APPROVED	Plant: = Location: + Sublocation: +
				Document no. 3HAC024480-011	Rev. Ind 18
Prepared by, date: A Hägglund	Approved by, date: S Hällgren 2024-03-18				Page 113 Next 114 Total 164

We reserve all rights in this document and in the information contained therein. Reproduction, use or disclosure to third parties without express authority is strictly forbidden. © Copyright ABB

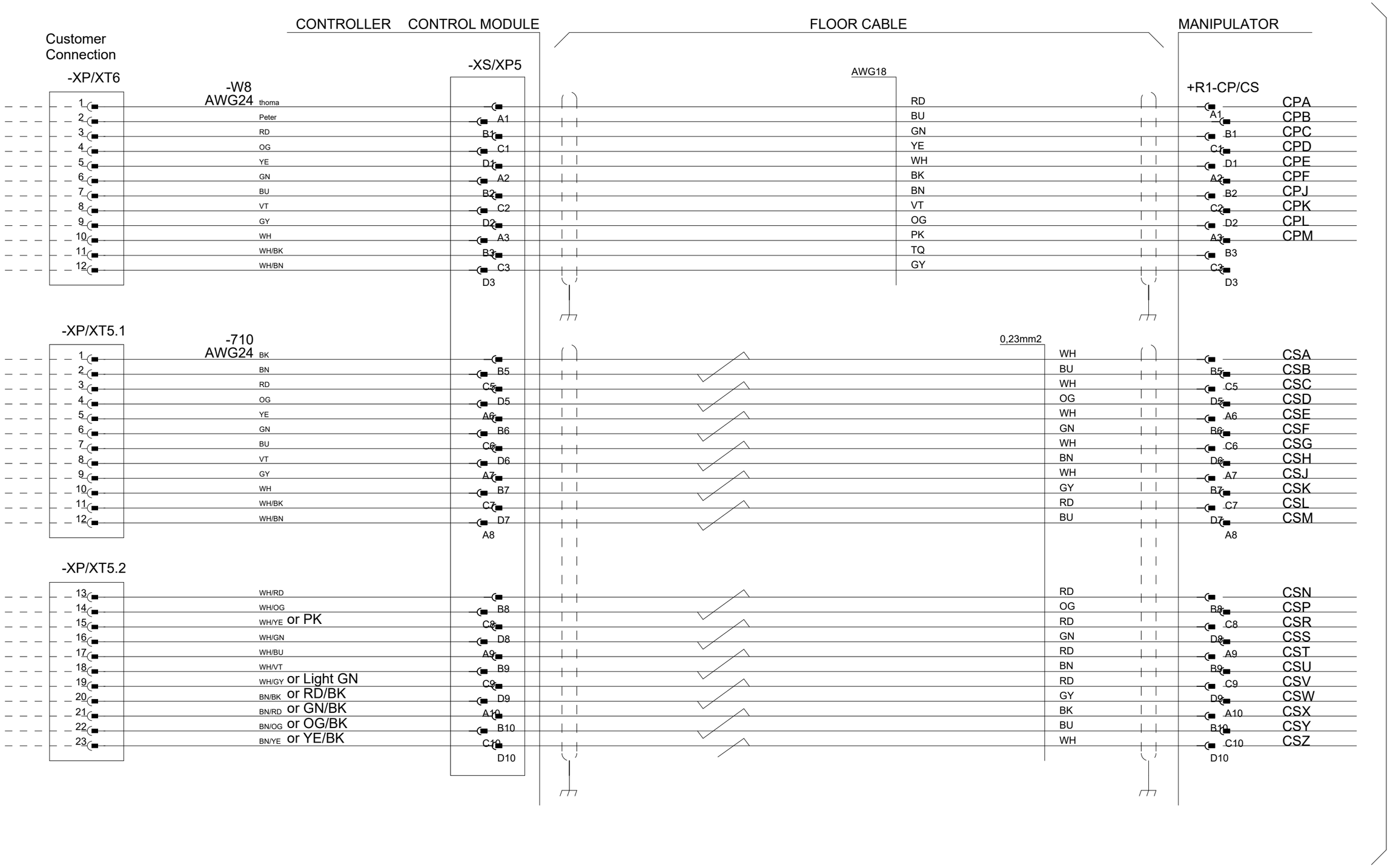

Latest revision:		Lab/Office: RA/RDP	IRC5 DESIGN Rel: 24:B CUSTOMER POWER/SIGNAL SINGLE CABINET IRB 4400	Status: APPROVED	Plant: = Location: + Sublocation: +	
Prepared by, date: A Hägglund	Approved by, date: S Hällgren 2024-03-18			Document no. 3HAC024480-011	Rev. Ind 18	Page 114 Next 115 Total 164

We reserve all rights in this document and in the information contained therein. Reproduction, use or disclosure to third parties without express authority is strictly forbidden. © Copyright ABB

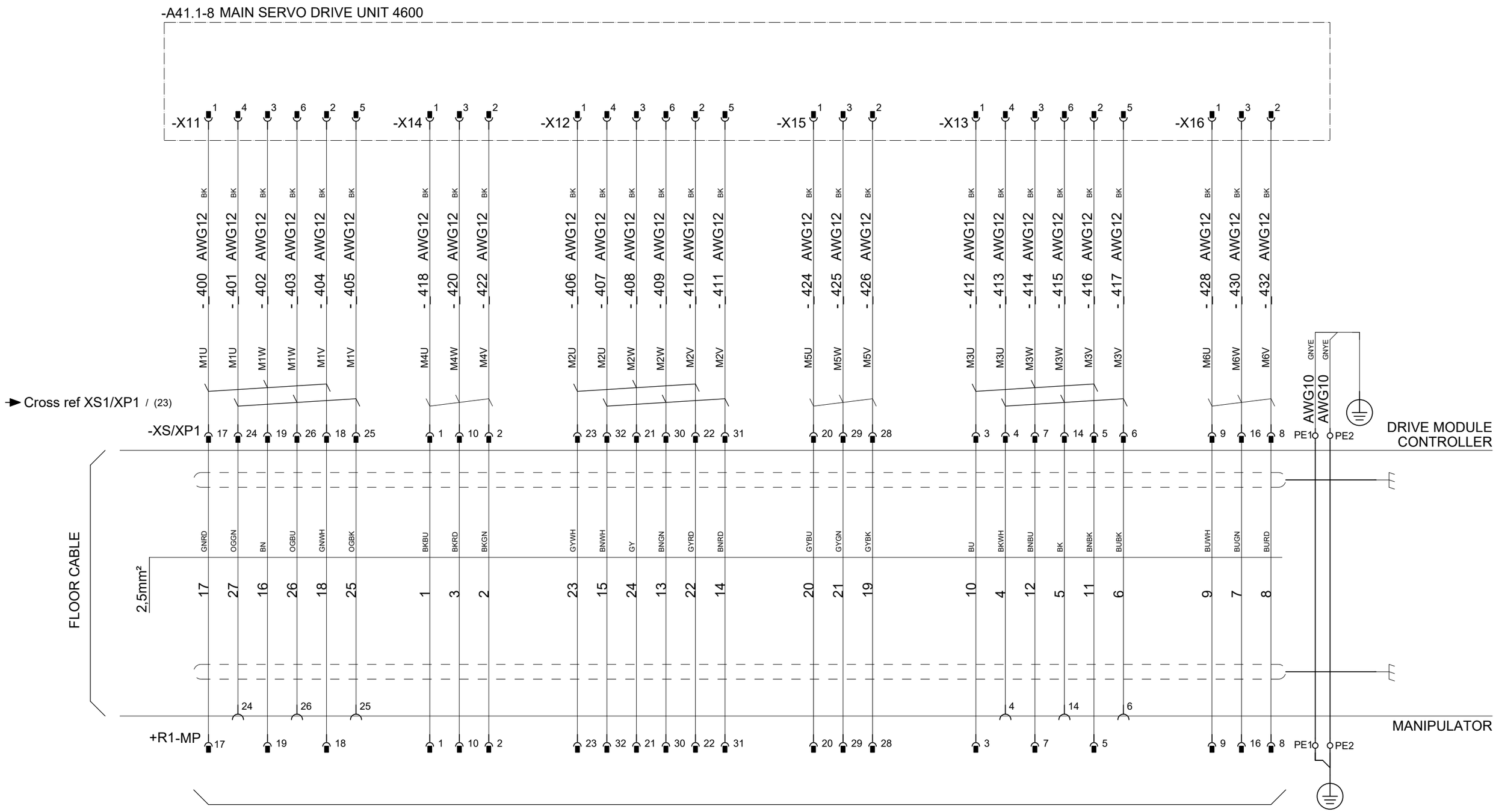

According to Manipulator circuit diagram 3HAC029038-003

Latest revision:		ABB	Lab/Office: RA/RDP	IRC5 DESIGN Rel: 24:B SERVO DRIVE SYSTEM IRB 4600	Status: APPROVED	Plant: = Location: + Sublocation: +	
					Document no. 3HAC024480-011	Rev. Ind 18	Page 115 Next 116 Total 164
Prepared by, date: A Hägglund	Approved by, date: S Hällgren 2024-03-18						

We reserve all rights in this document and in the information contained therein. Reproduction, use or disclosure to third parties without express authority is strictly forbidden. © Copyright ABB

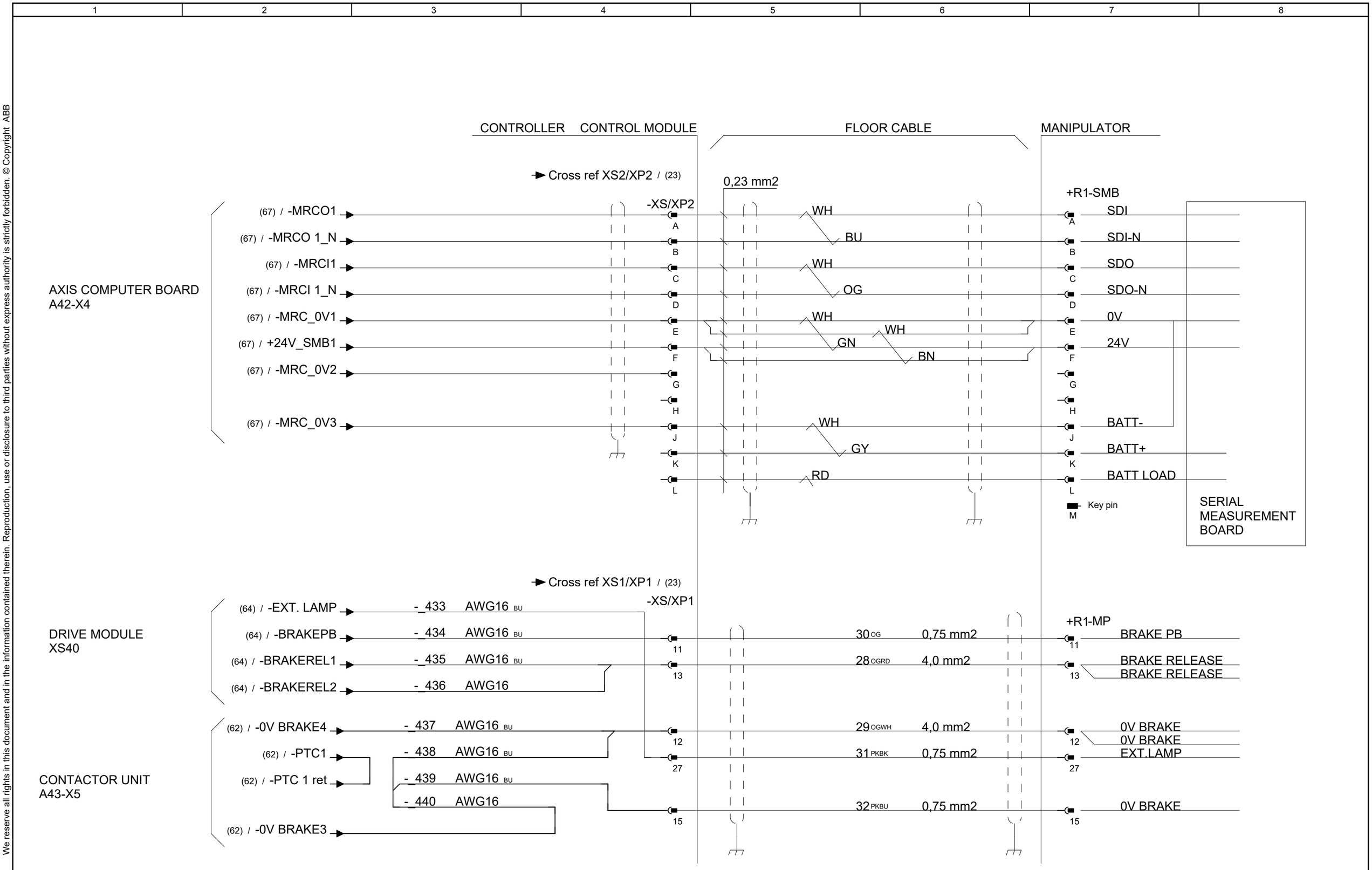

Latest revision:		Lab/Office: RA/RDP	IRC5 DESIGN Rel: 24:B CONTROL CABLE IRB 4600	Status: APPROVED	Plant: = Location: + Sublocation: +	
				Document no. 3HAC024480-011	Rev. Ind 18	Page 116 Next 117 Total 164
Prepared by, date: A Hägglund	Approved by, date: S Hällgren 2024-03-18					

We reserve all rights in this document and in the information contained therein. Reproduction, use or disclosure to third parties without express authority is strictly forbidden. © Copyright ABB

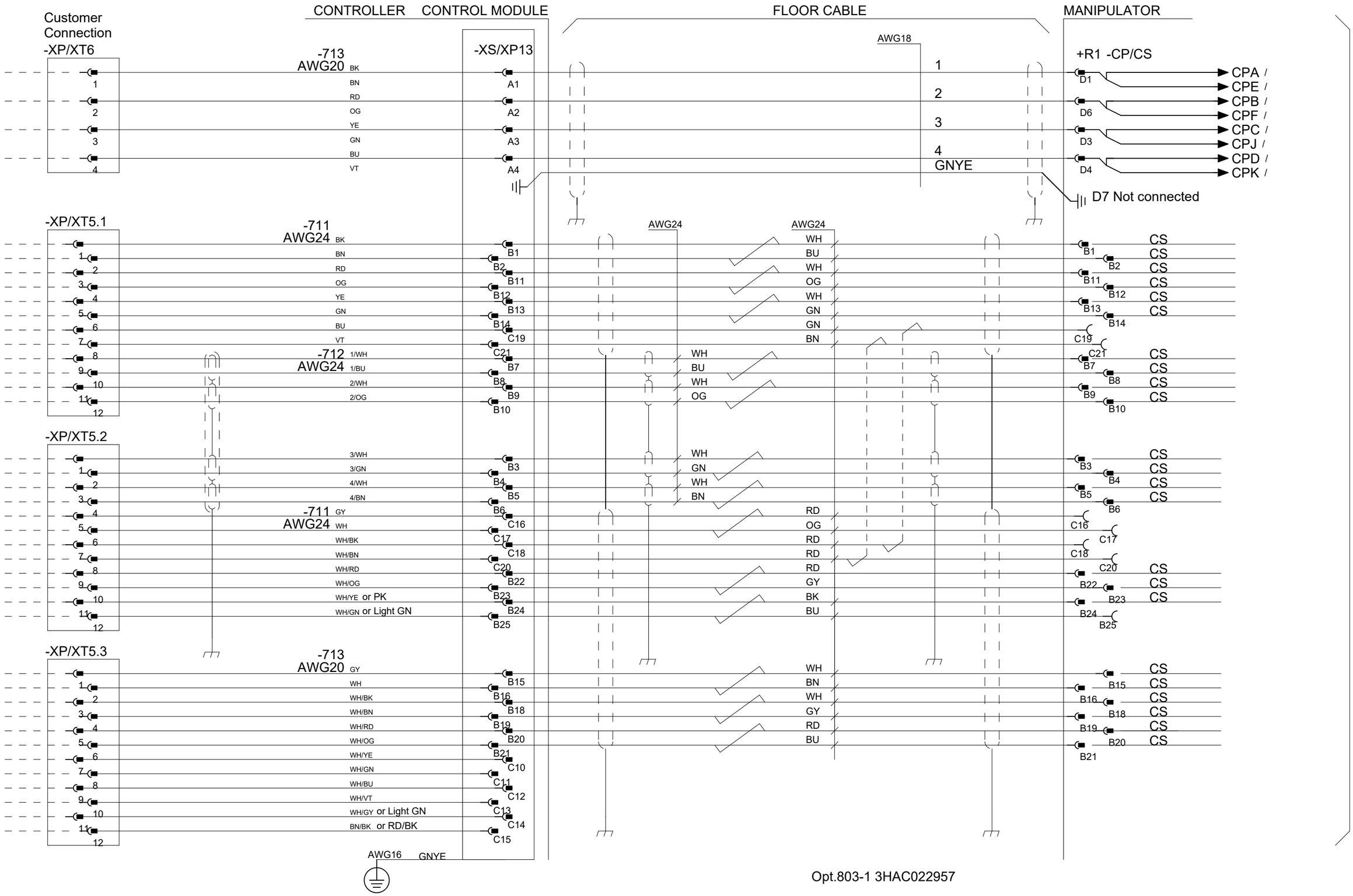

Latest revision:		Lab/Office: RA/RDP	IRC5 DESIGN Rel: 24:B CUSTOMER POWER/SIGNAL IRB4600	Status: APPROVED	Plant: = Location: + Sublocation: +
Prepared by, date: A Hägglund	Approved by, date: S Hällgren 2024-03-18			Document no. 3HAC024480-011	Rev. Ind 18

We reserve all rights in this document and in the information contained therein. Reproduction, use or disclosure to third parties without express authority is strictly forbidden. © Copyright ABB

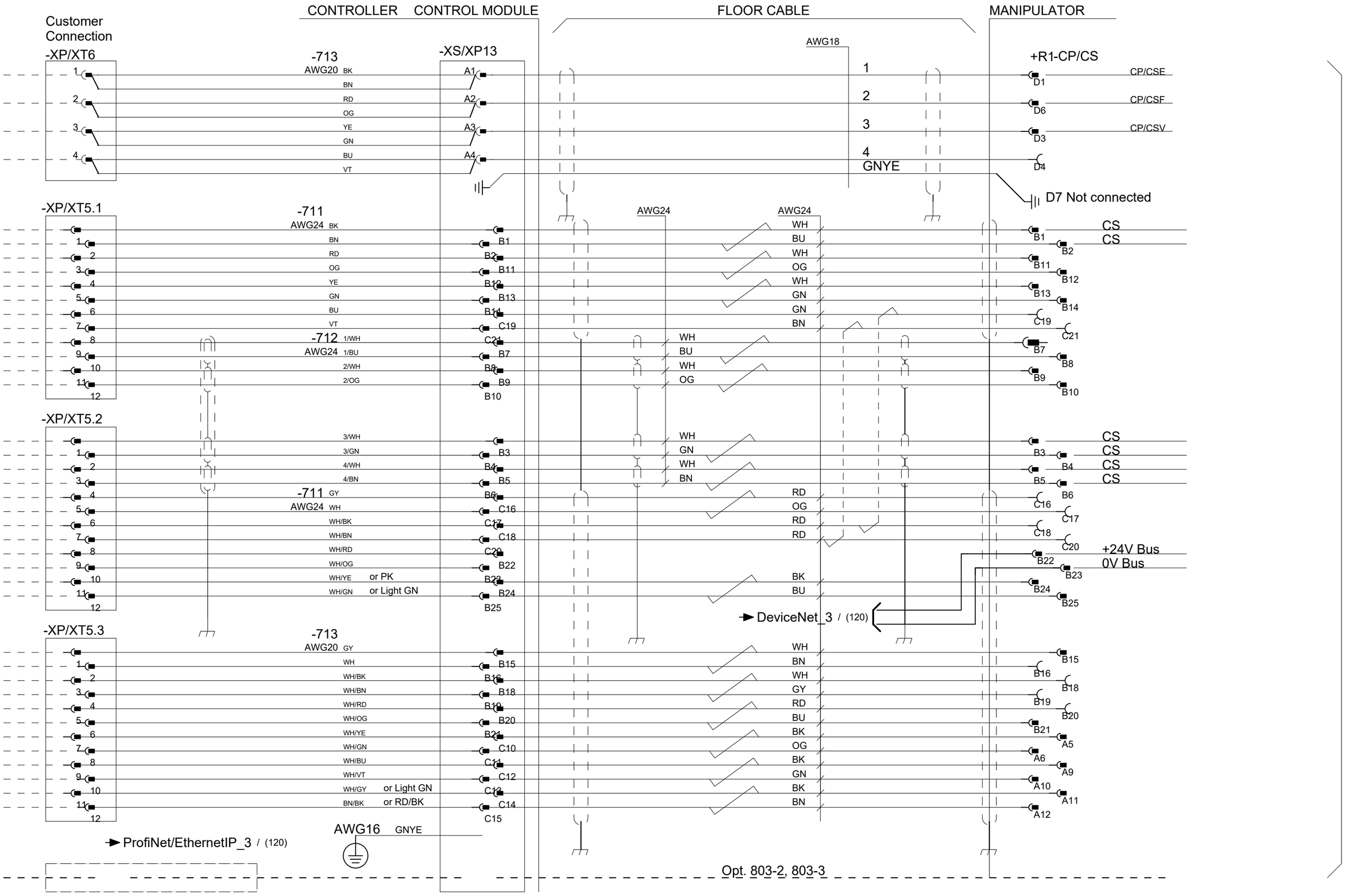

Latest revision:		Lab/Office: RA/RDP	IRC5 DESIGN Rel: 24:B CUSTOMER POWER/SIGNAL DEVICE NET & PROFINET/ETHERNET/IP IRB4600	Status: APPROVED	Plant: = Location: + Sublocation: +
Prepared by, date: A Hägglund	Approved by, date: S Hällgren 2024-03-18			Document no. 3HAC024480-011	Rev. Ind 18

We reserve all rights in this document and in the information contained therein. Reproduction, use or disclosure to third parties without express authority is strictly forbidden. © Copyright ABB

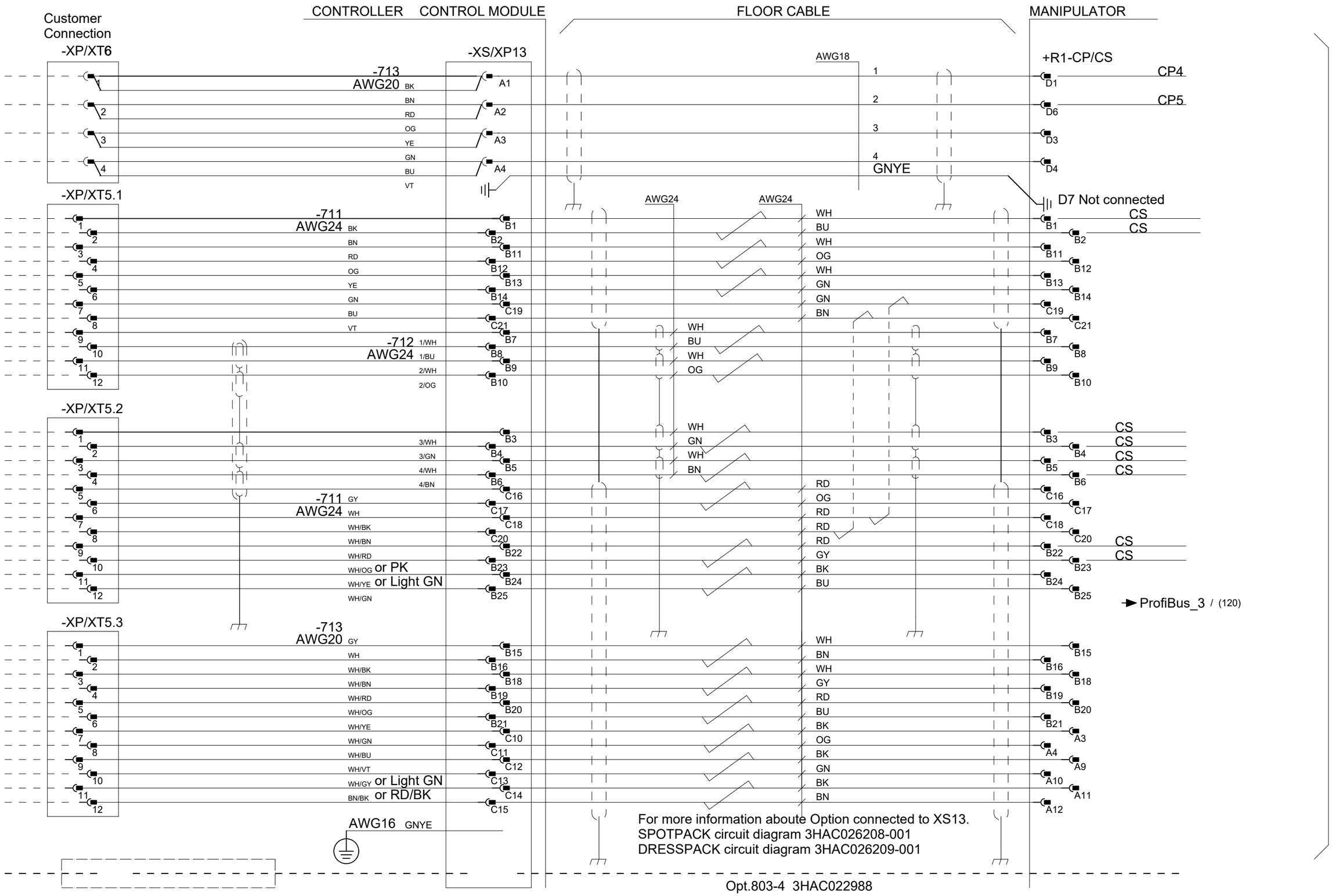

Latest revision:		Lab/Office: RA/RDP	IRC5 DESIGN Rel: 24:B CUSTOMER POWER/SIGNAL PROFI BUS IRB 4600	Status: APPROVED	Plant: = Location: + Sublocation: +
Prepared by, date: A Hägglund	Approved by, date: S Hällgren 2024-03-18			Document no. 3HAC024480-011	Rev. Ind 18

We reserve all rights in this document and in the information contained therein. Reproduction, use or disclosure to third parties without express authority is strictly forbidden. © Copyright ABB

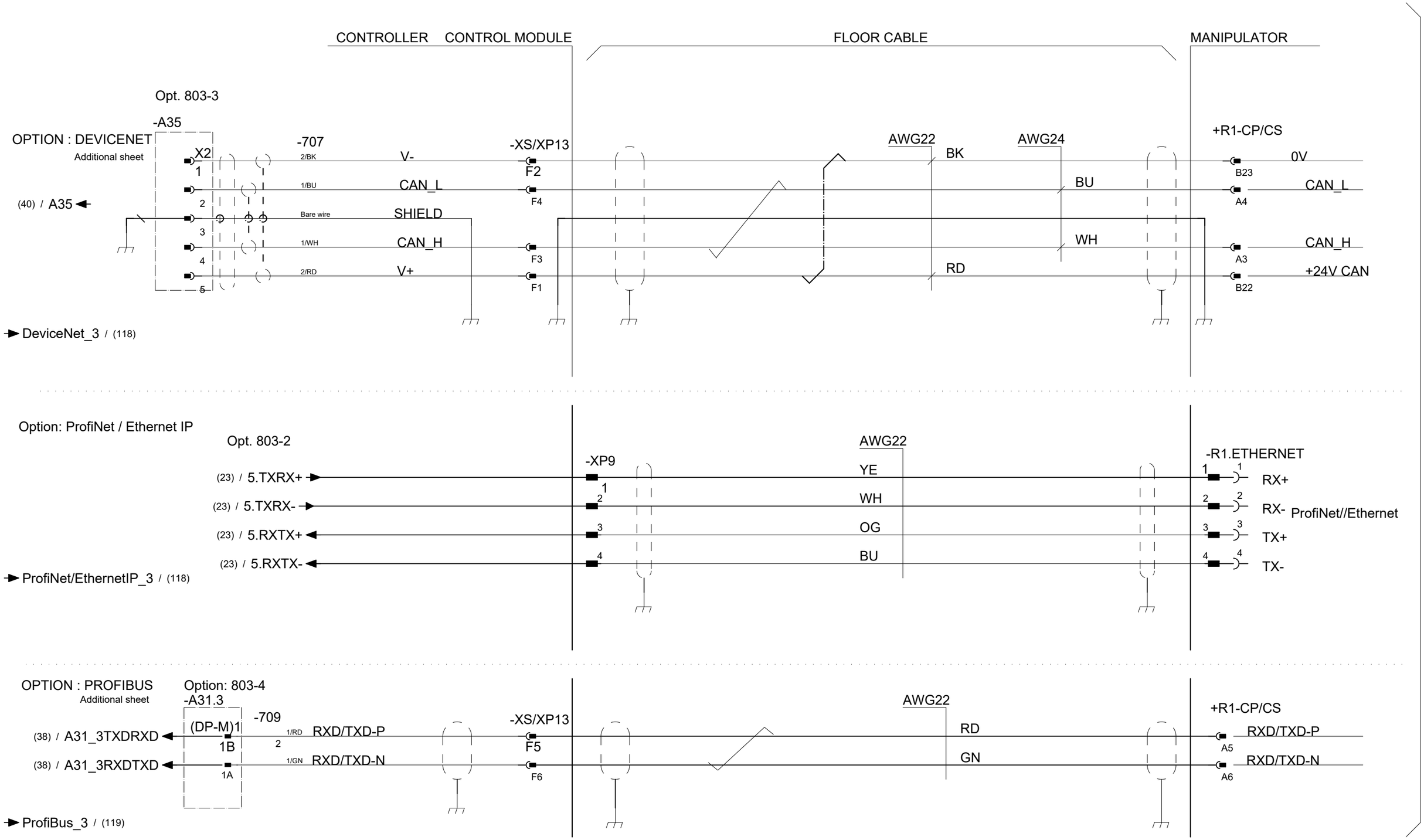

According to Manipulator diagram 3HAC029038-003

Latest revision:		Lab/Office: RA/RDP	IRC5 DESIGN Rel: 24:B DevNet/ProfiNet/Ethernet/Profibus addition to CP/CS IRB4600	Status: APPROVED	Plant: = Location: + Sublocation: +
Prepared by, date: A Hägglund	Approved by, date: S Hällgren 2024-03-18			Document no. 3HAC024480-011	Rev. Ind 18

We reserve all rights in this document and in the information contained therein. Reproduction, use or disclosure to third parties without express authority is strictly forbidden. © Copyright ABB

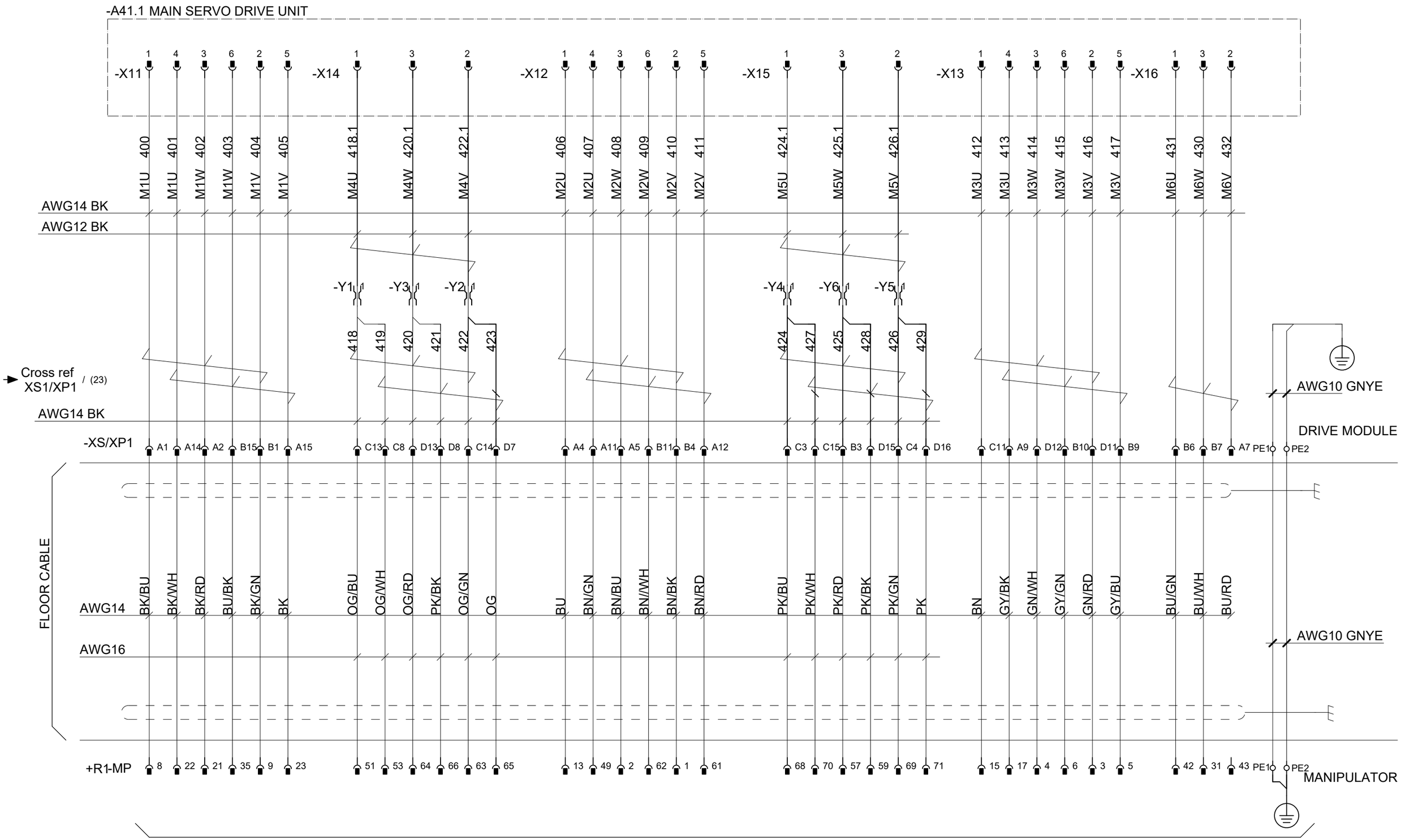

Referring to the circuit diagram 3HAC8935-1.

Latest revision:		ABB Lab/Office: RA/RDP	IRC5 DESIGN Rel: 24:B SERVO DRIVE SYSTEM IRB 6400R	Status: APPROVED	Plant: = Location: + Sublocation: +
Prepared by, date: A Hägglund	Approved by, date: S Hällgren 2024-03-18			Document no. 3HAC024480-011	Rev. Ind 18
					Page 120.1 Next 120.2 Total 164

We reserve all rights in this document and in the information contained therein. Reproduction, use or disclosure to third parties without express authority is strictly forbidden. © Copyright ABB

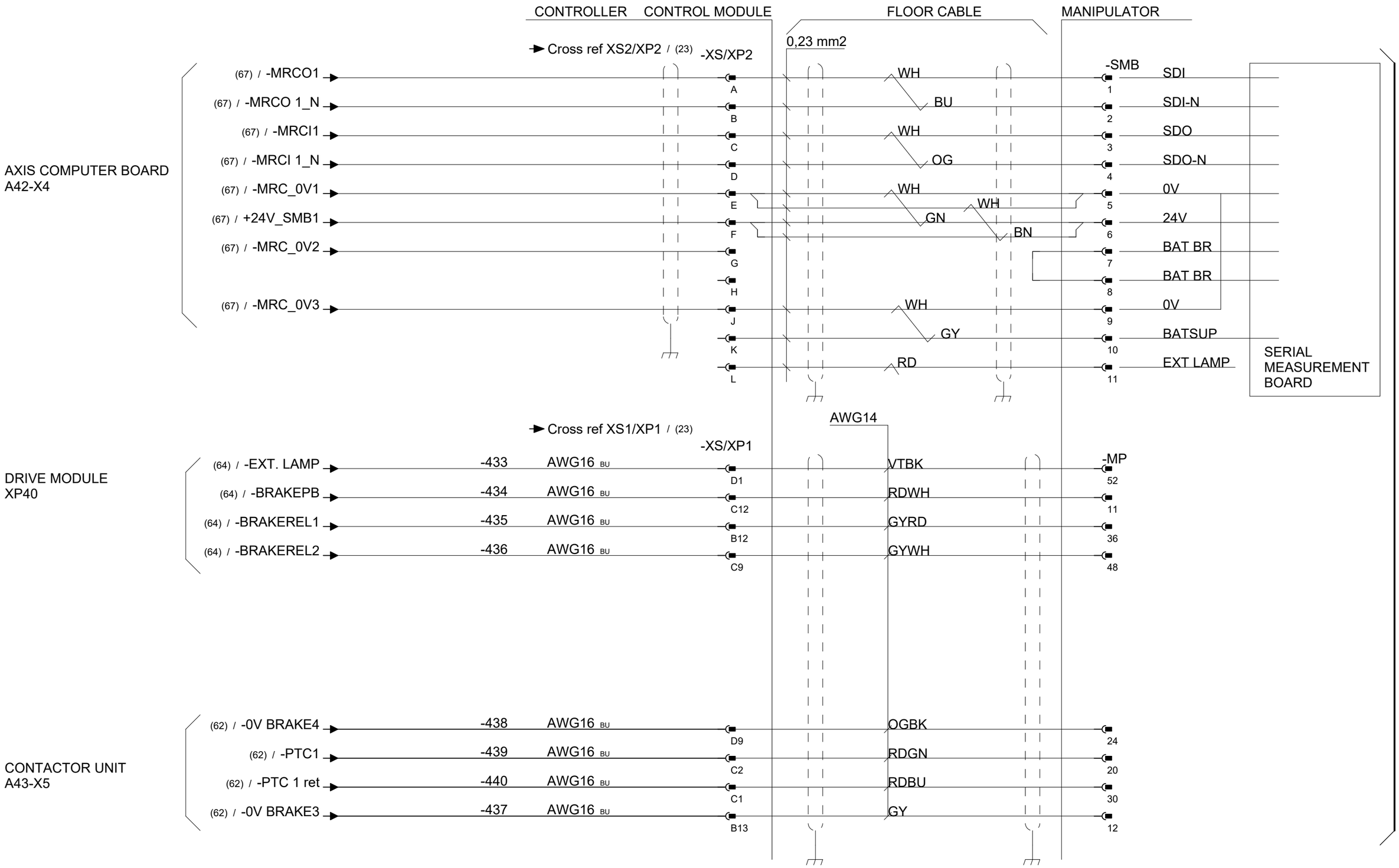

Latest revision:		ABB Lab/Office: RA/RDP	IRC5 DESIGN Rel: 24:B CONTROL CABLE IRB 6400R	Status: APPROVED	Plant: = Location: + Sublocation: +	
Prepared by, date: A Hägglund	Approved by, date: S Hällgren 2024-03-18			Document no. 3HAC024480-011	Rev. Ind 18	Page 120.2 Next 120.3 Total 164

We reserve all rights in this document and in the information contained therein. Reproduction, use or disclosure to third parties without express authority is strictly forbidden. © Copyright ABB

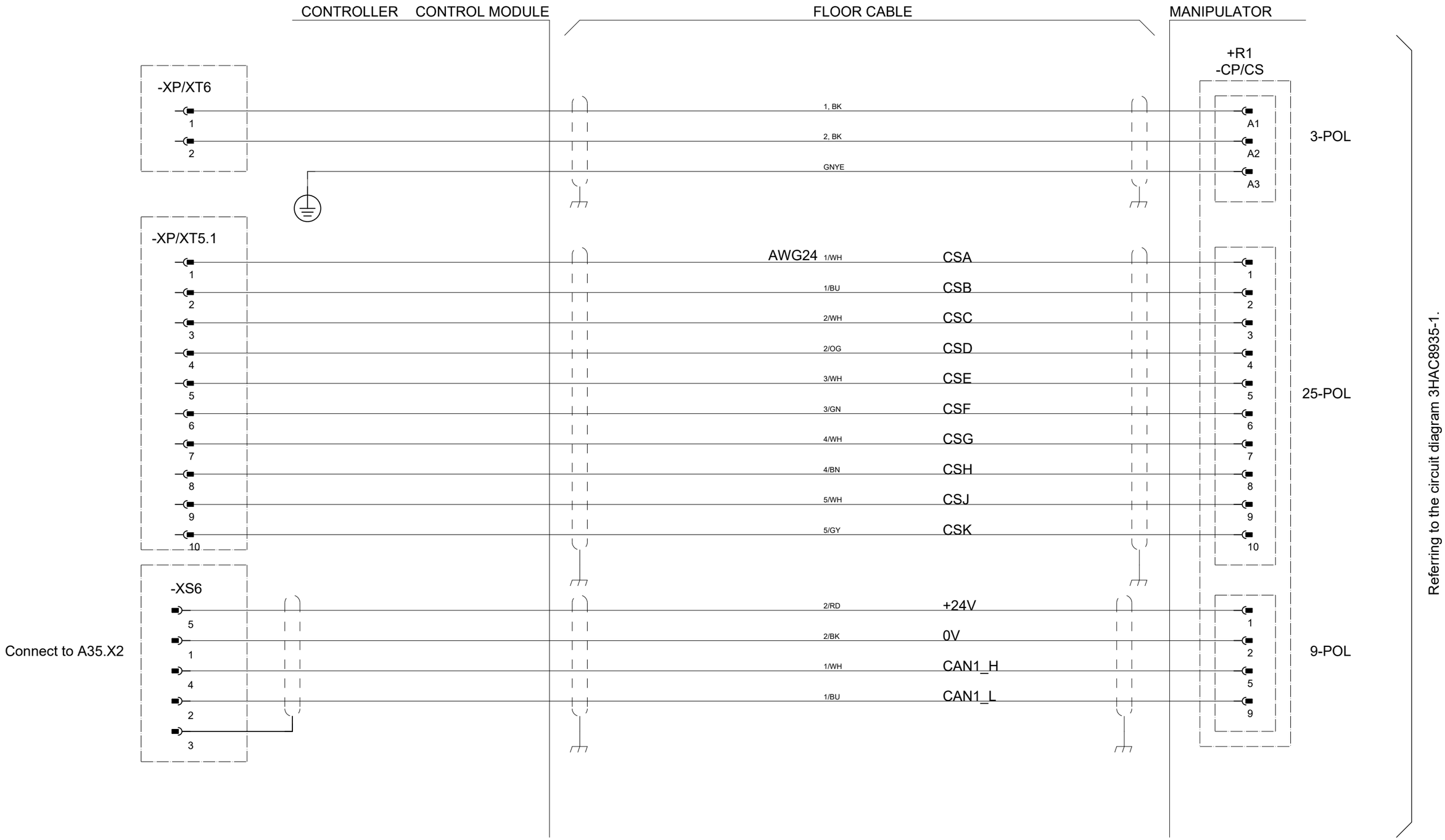

Latest revision:		ABB	Lab/Office: RA/RDP	IRC5 DESIGN Rel: 24:B CUSTOMER POWER/SIGNAL/BUS IRB 6400R	Status: APPROVED	Plant: = Location: + Sublocation: +
Prepared by, date: A Hägglund	Approved by, date: S Hällgren 2024-03-18				Document no. 3HAC024480-011	Rev. Ind 18

We reserve all rights in this document and in the information contained therein. Reproduction, use or disclosure to third parties without express authority is strictly forbidden. © Copyright ABB

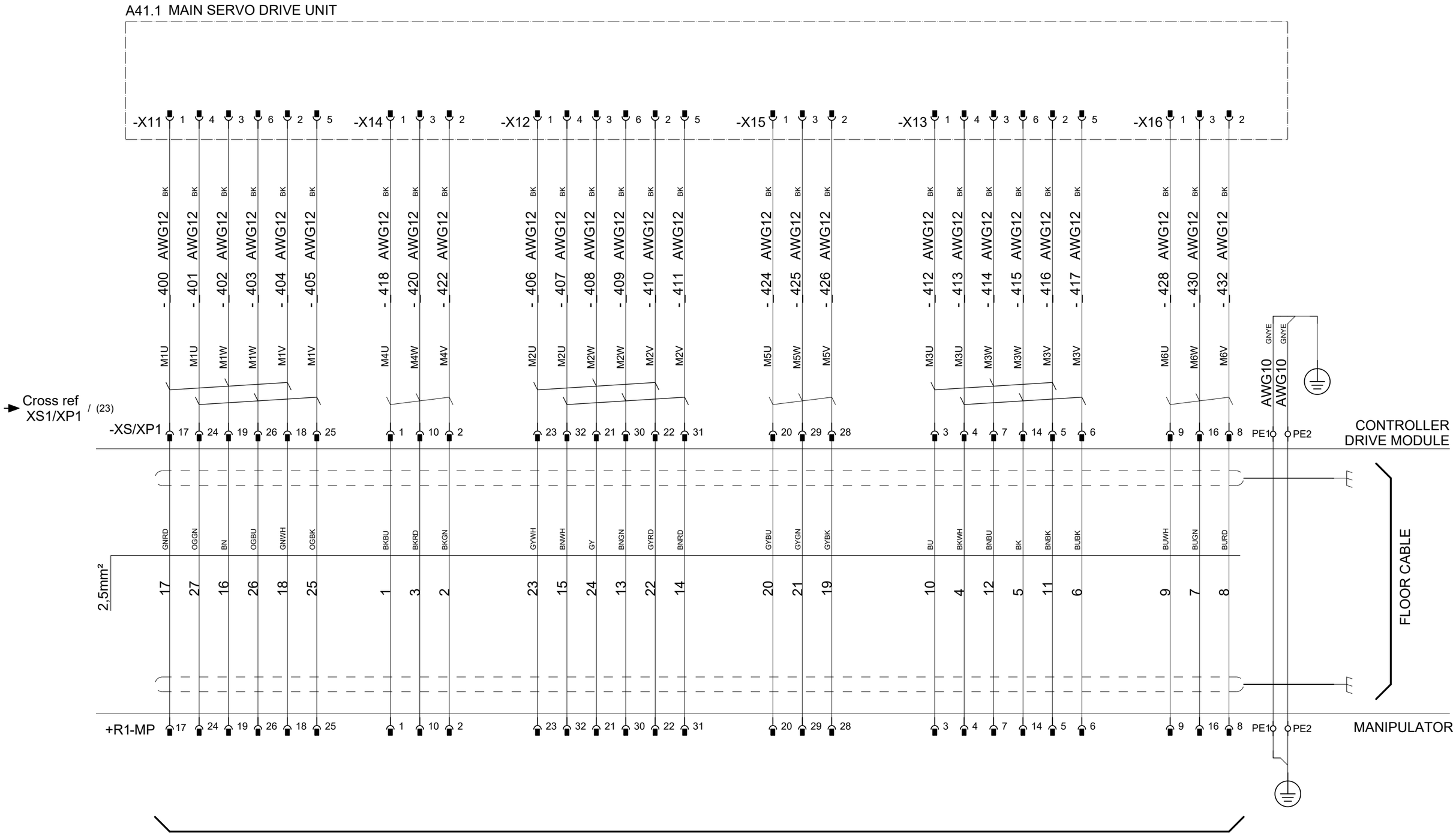

According to manipulator circuit diagram 3HAC043446-005

Latest revision:		ABB	Lab/Office: RA/RDP	IRC5 DESIGN Rel: 24:B SERVO DRIVE SYSTEM IRB 6700	Status: APPROVED	Plant: = Location: + Sublocation: +
Prepared by, date: A Hägglund	Approved by, date: S Hällgren 2024-03-18				Document no. 3HAC024480-011	Rev. Ind 18
						Page 120.4 Next 120.5 Total 164

We reserve all rights in this document and in the information contained therein. Reproduction, use or disclosure to third parties without express authority is strictly forbidden. © Copyright ABB

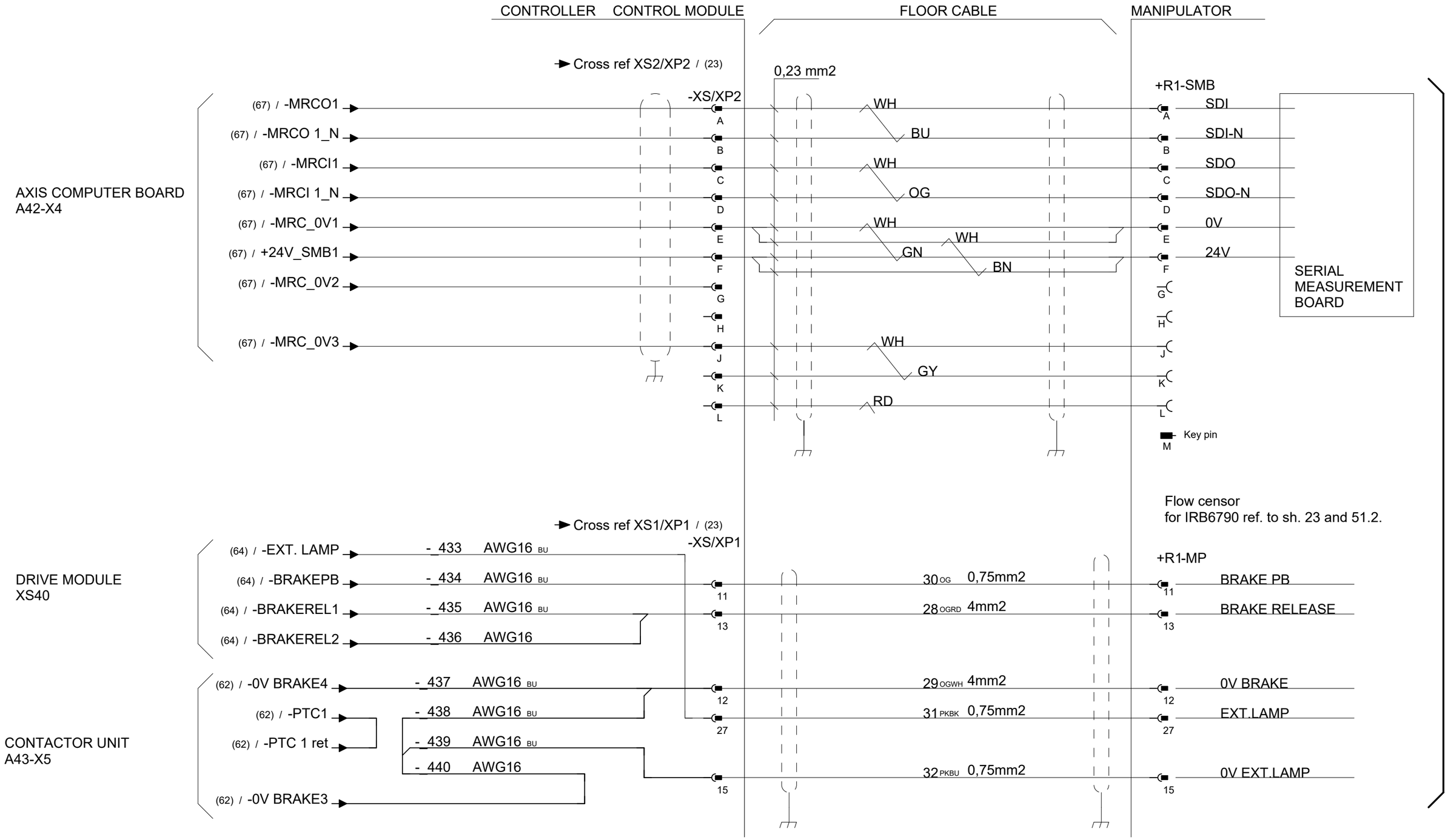

According to manipulator circuit diagram 3HAC043446-005 r00

Latest revision:		Lab/Office: RA/RDP	IRC5 DESIGN Rel: 24:B CONTROL CABLE IRB 6700/6790	Status: APPROVED	Plant: = Location: + Sublocation: +
Prepared by, date: A Hägglund	Approved by, date: S Hällgren 2024-03-18			Document no. 3HAC024480-011	Rev. Ind 18
					Page 120.5 Next 120.6 Total 164

We reserve all rights in this document and in the information contained therein. Reproduction, use or disclosure to third parties without express authority is strictly forbidden. © Copyright ABB

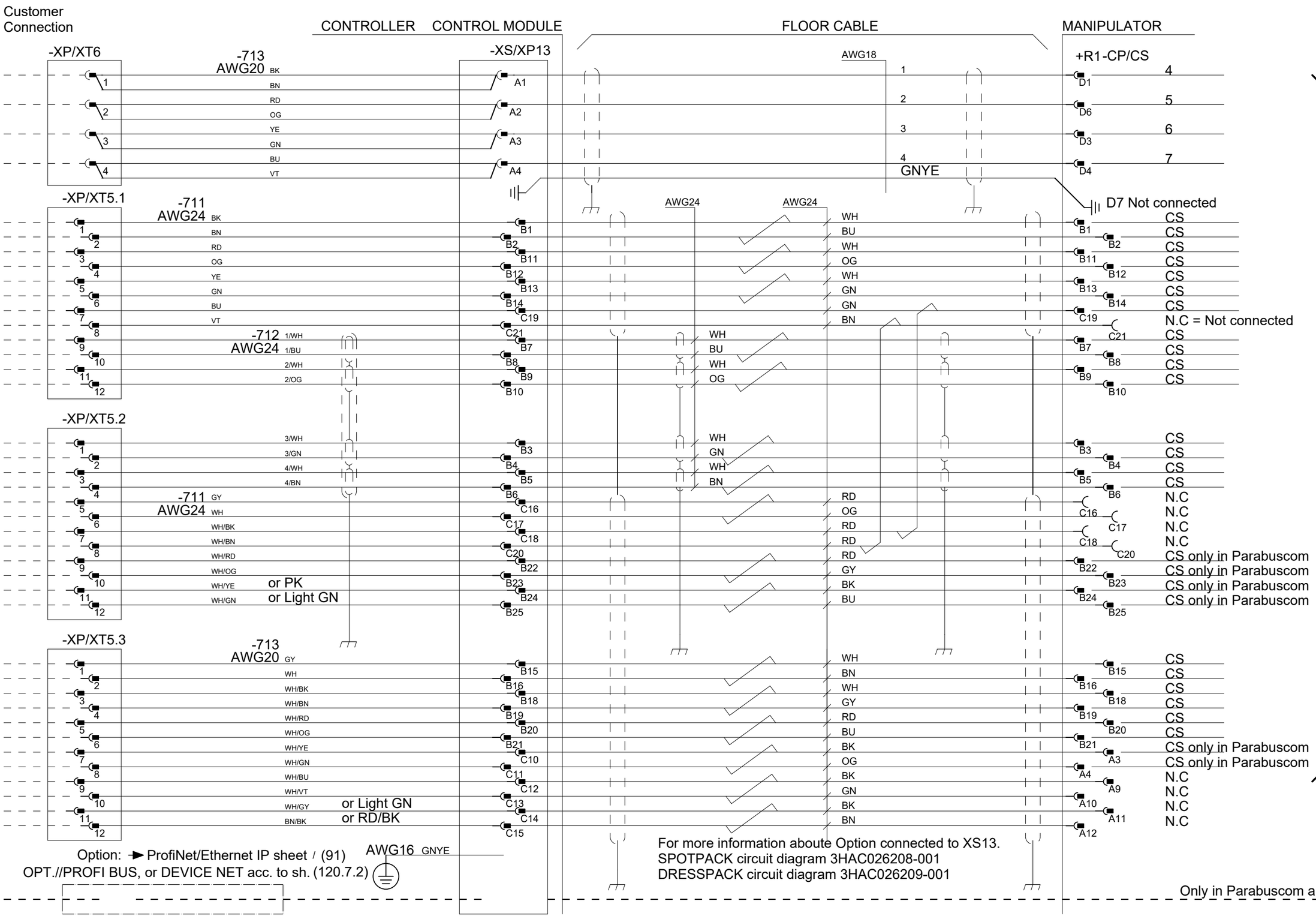

Latest revision:		ABB Lab/Office: RA/RDP	IRC5 DESIGN Rel: 24:B CUSTOMER POWER/SIGNAL PARABUSCOM SINGLE CABINET PROFI/DEVICE NET BUS IRB 6700	Status: APPROVED	Plant: = Location: + Sublocation: +
Prepared by, date: A Hägglund	Approved by, date: S Hällgren 2024-03-18			Document no. 3HAC024480-011	Rev. Ind 18
					Page 120.6 Next 120.7 Total 164

We reserve all rights in this document and in the information contained therein. Reproduction, use or disclosure to third parties without express authority is strictly forbidden. © Copyright ABB

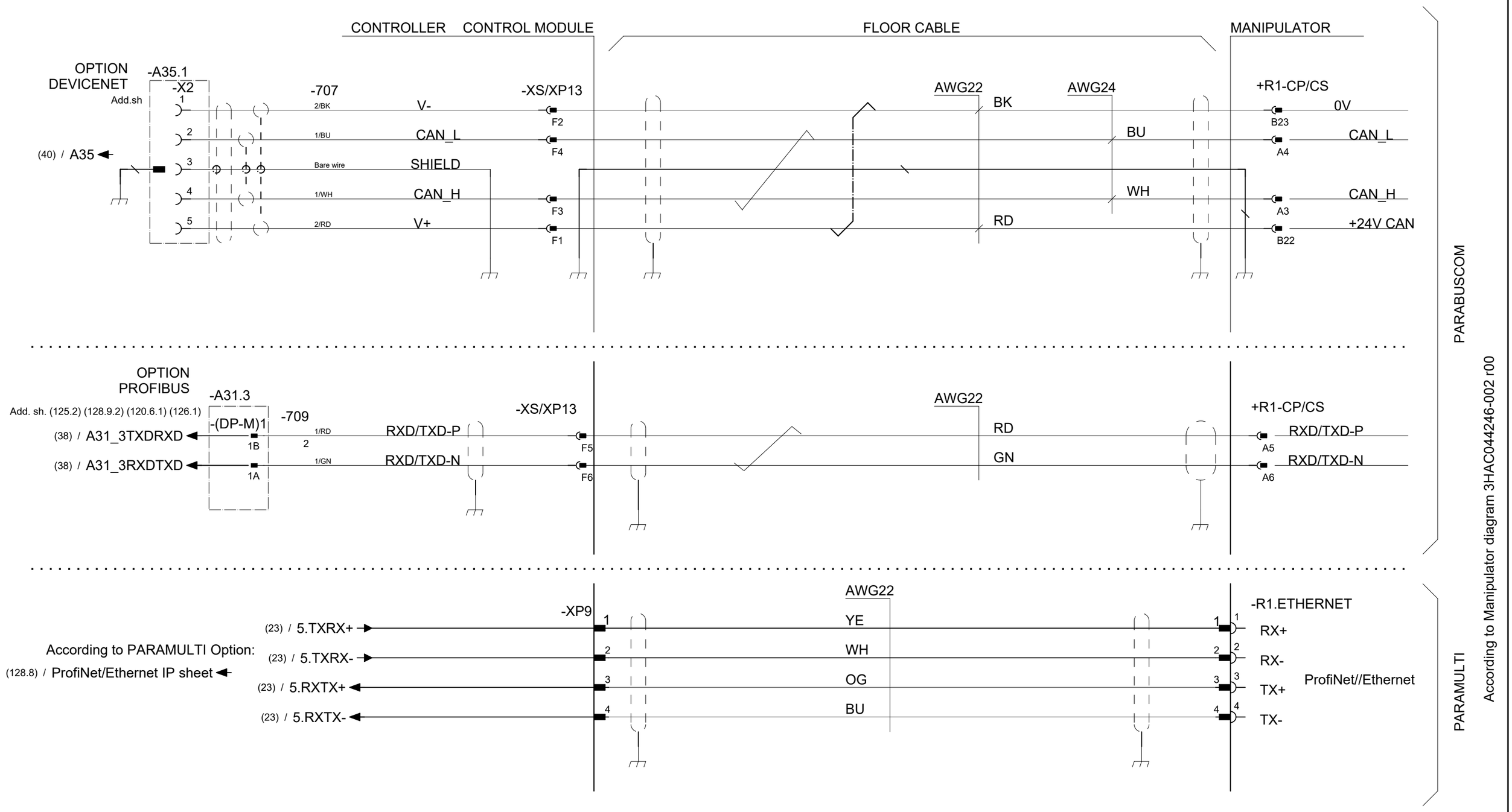

Latest revision:		Lab/Office: RA/RDP	IRC5 DESIGN Rel: 24:B DevNet//EtherNet//ProfiNet//PBUS ADDITION TO CP/CS IRB 6700	Status: APPROVED	Plant: = Location: + Sublocation: +	
Prepared by, date: A Hägglund	Approved by, date: S Hällgren 2024-03-18			Document no. 3HAC024480-011	Rev. Ind 18	Page 120.7 Next 121 Total 164

We reserve all rights in this document and in the information contained therein. Reproduction, use or disclosure to third parties without express authority is strictly forbidden. © Copyright ABB

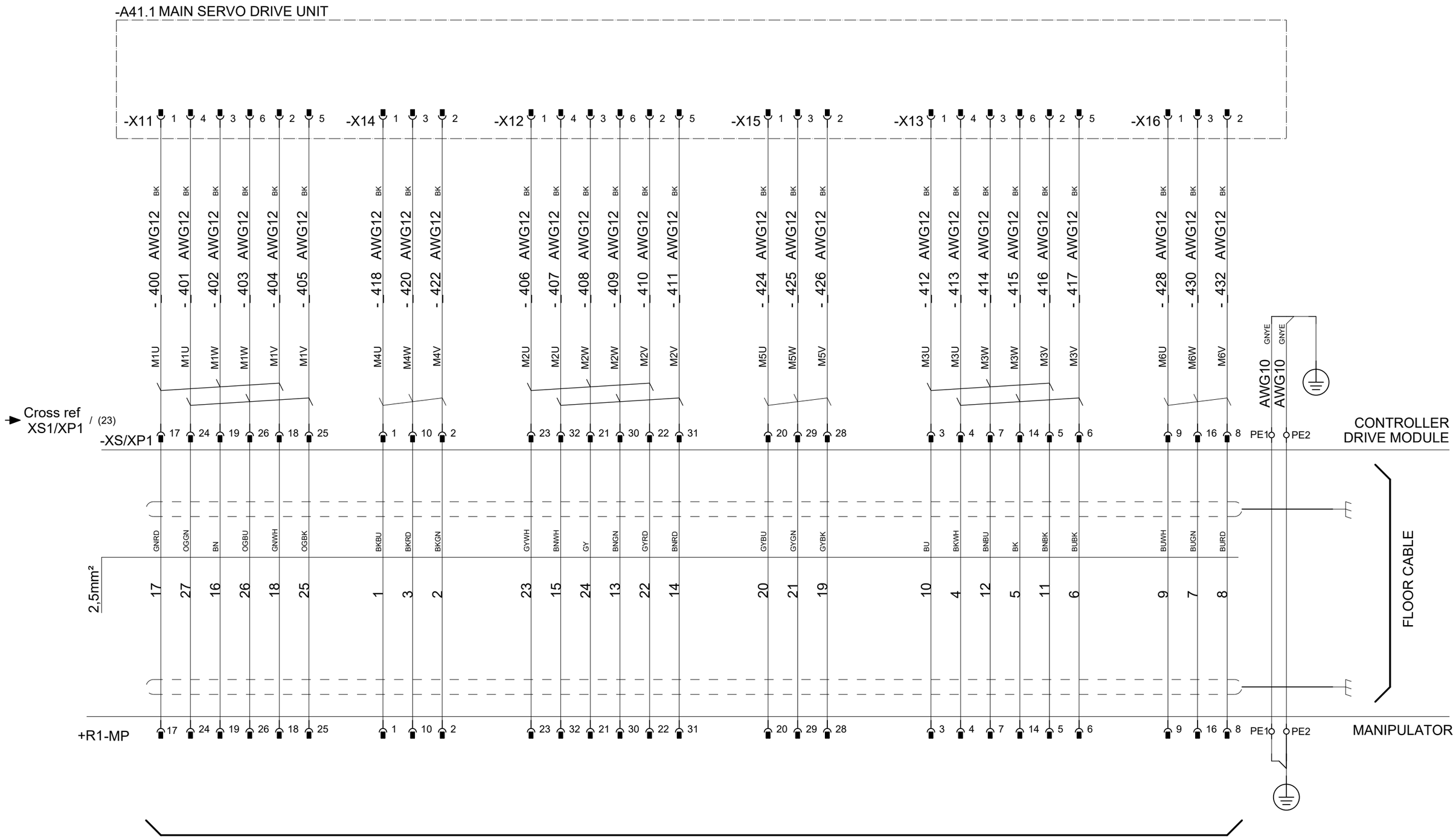

According to Manipulator IRB66XX - 76XX circuit diagram 3HAC025744-001

Latest revision:		Lab/Office: RA/RDP	IRC5 DESIGN Rel: 24:B SERVO DRIVE SYSTEM IRB 66xx - 76xx	Status: APPROVED	Plant: = Location: + Sublocation: +
Prepared by, date: A Hägglund	Approved by, date: S Hällgren 2024-03-18			Document no. 3HAC024480-011	Rev. Ind 18

We reserve all rights in this document and in the information contained therein. Reproduction, use or disclosure to third parties without express authority is strictly forbidden. © Copyright ABB

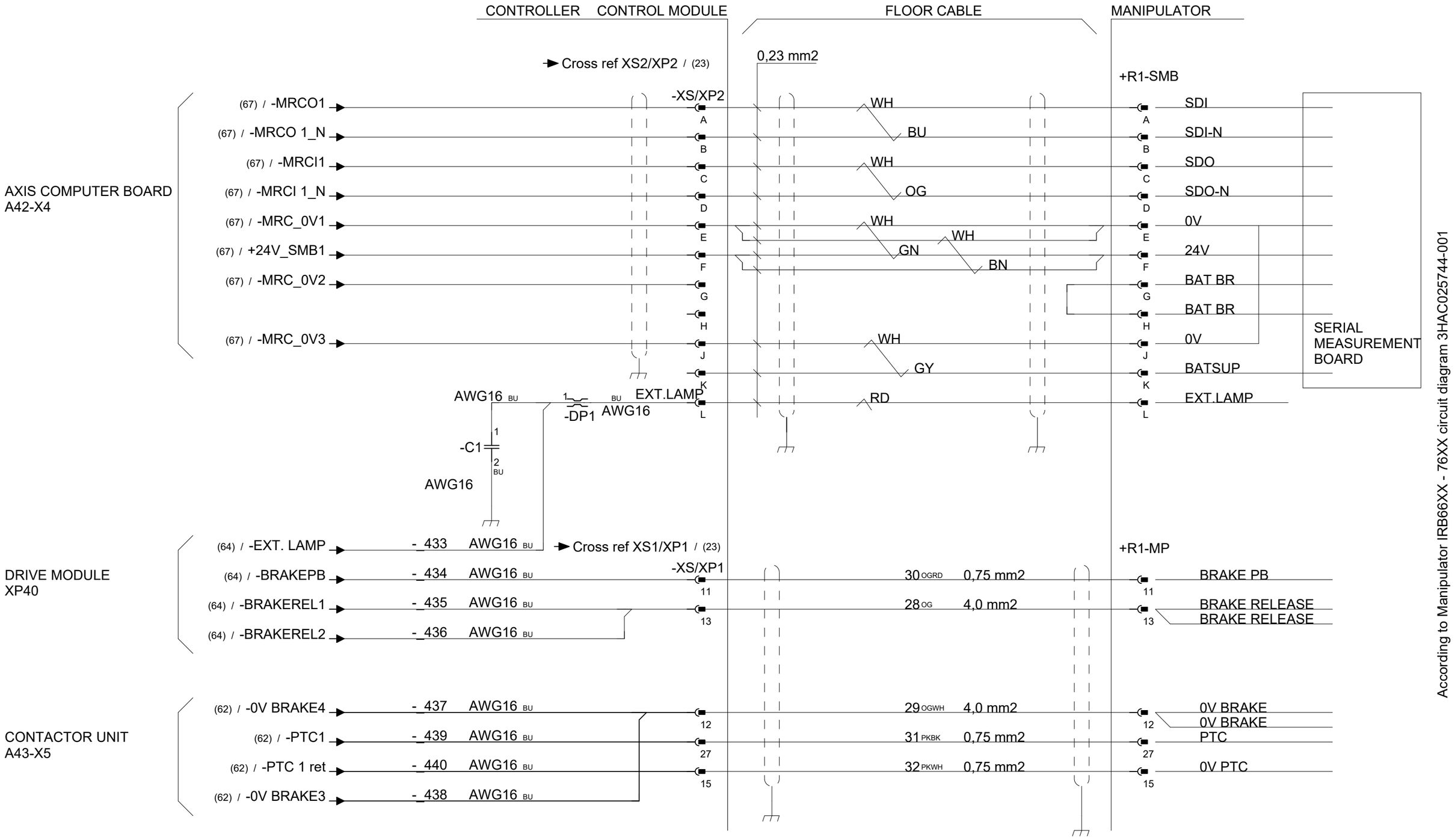

Latest revision:		Lab/Office: RA/RDP	IRC5 DESIGN Rel: 24:B CONTROL CABLE IRB 66xx - 76xx	Status: APPROVED	Plant: = Location: + Sublocation: +	
Prepared by, date: A Hägglund	Approved by, date: S Hällgren 2024-03-18			Document no. 3HAC024480-011	Rev. Ind 18	Page 122 Next 123 Total 164

We reserve all rights in this document and in the information contained therein. Reproduction, use or disclosure to third parties without express authority is strictly forbidden. © Copyright ABB

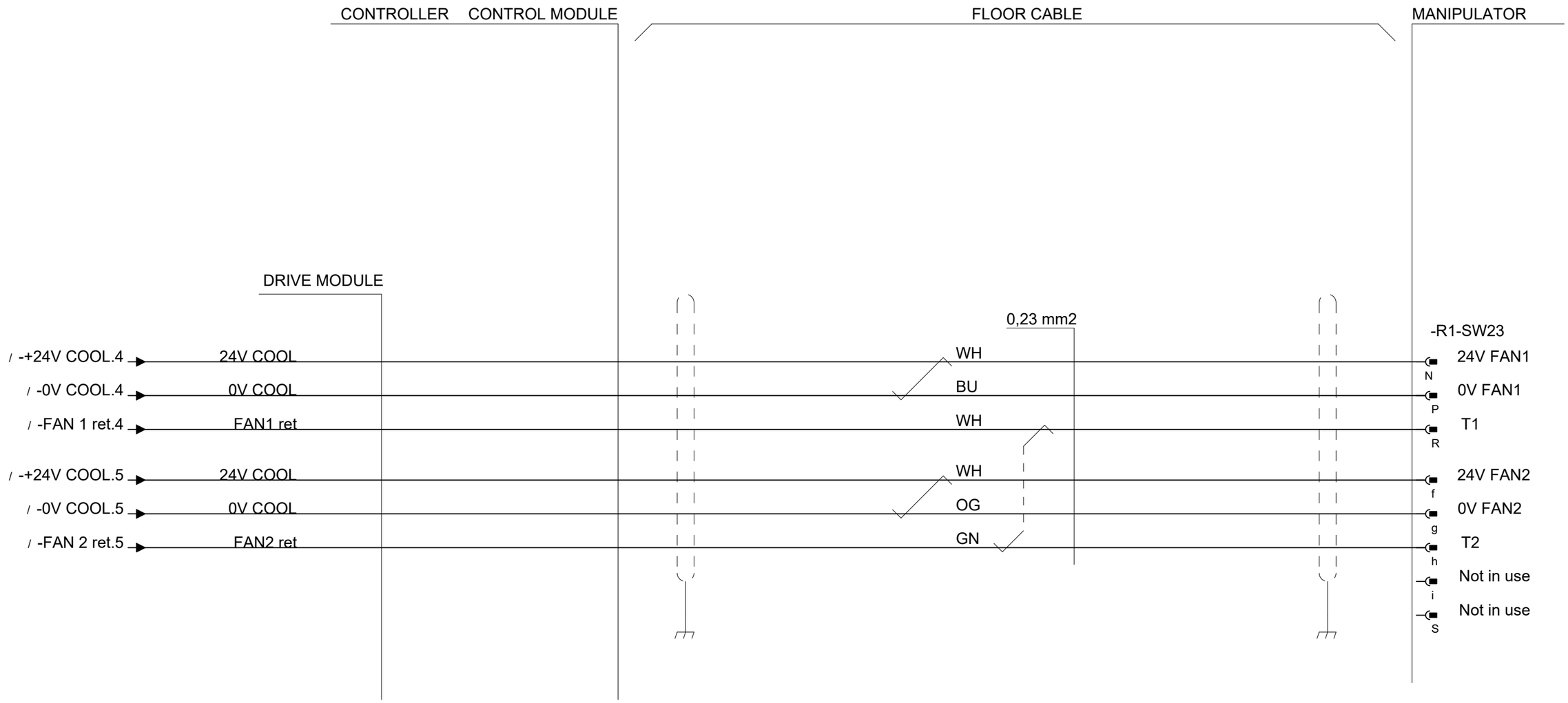

Latest revision:		Lab/Office: RA/RDP	IRC5 DESIGN Rel: 24:B COOLING AXES 1/2 SINGLE CABINET IRB 6600 - 7600	Status: APPROVED	Plant: = Location: + Sublocation: +
Prepared by, date: A Hägglund	Approved by, date: S Hällgren 2024-03-18			Document no. 3HAC024480-011	Rev. Ind 18
					Page 123 Next 124 Total 164

We reserve all rights in this document and in the information contained therein. Reproduction, use or disclosure to third parties without express authority is strictly forbidden. © Copyright ABB

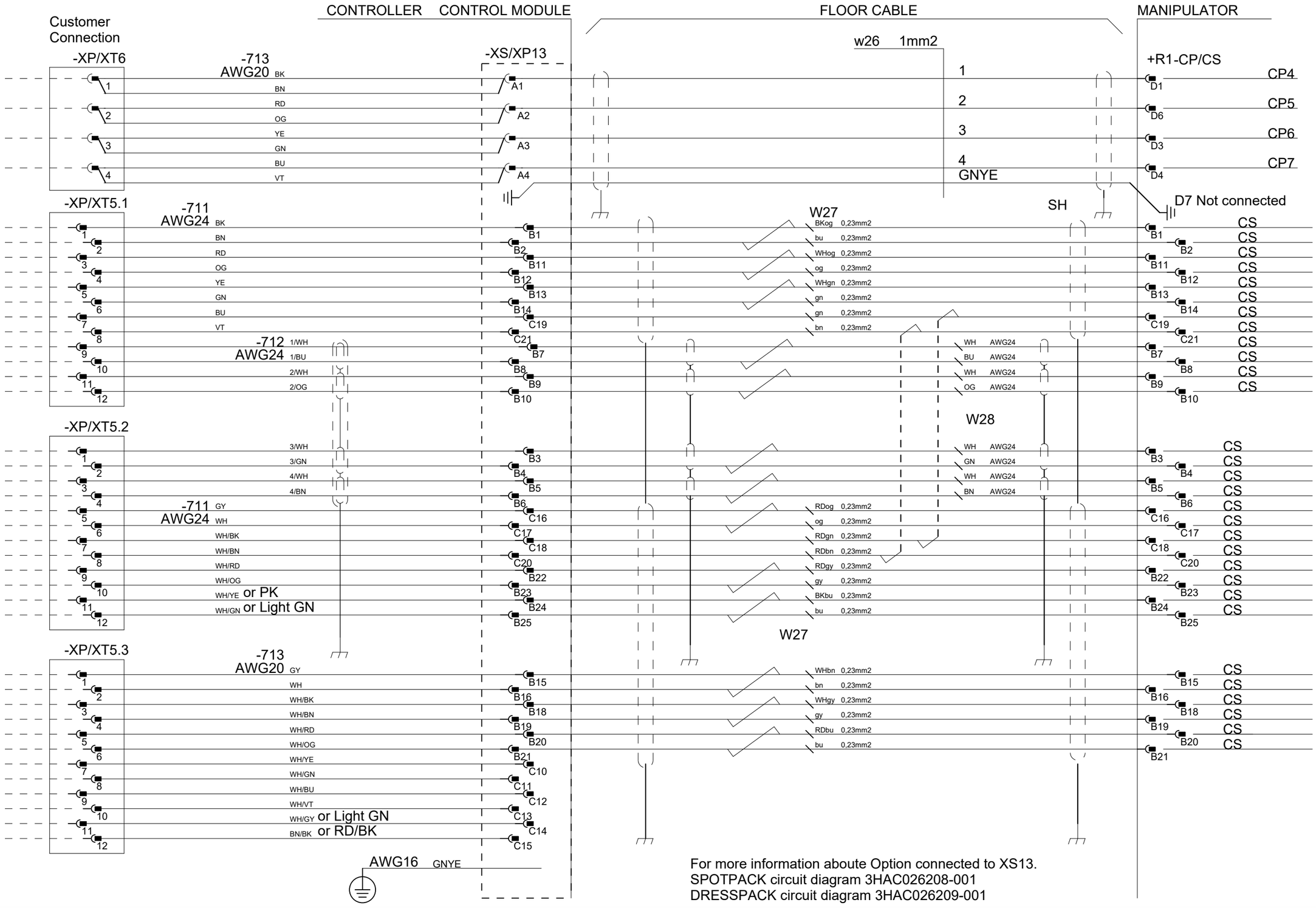

For more information aboute Option connected to XS13.
SPOTPACK circuit diagram 3HAC026208-001
DRESSPACK circuit diagram 3HAC026209-001

According to Manipulator diagram 3HAC025744-001 and 3HAC13347-1

Latest revision:		Lab/Office: RA/RDP	IRC5 DESIGN Rel: 24:B CUSTOMER POWER/SIGNAL SINGLE CABINET IRB 6600 - 7600	Status: APPROVED	Plant: = Location: + Sublocation: +	
Prepared by, date: A Hägglund	Approved by, date: S Hällgren 2024-03-18			Document no. 3HAC024480-011	Rev. Ind 18	Page 124 Next 125 Total 164

We reserve all rights in this document and in the information contained therein. Reproduction, use or disclosure to third parties without express authority is strictly forbidden. © Copyright ABB

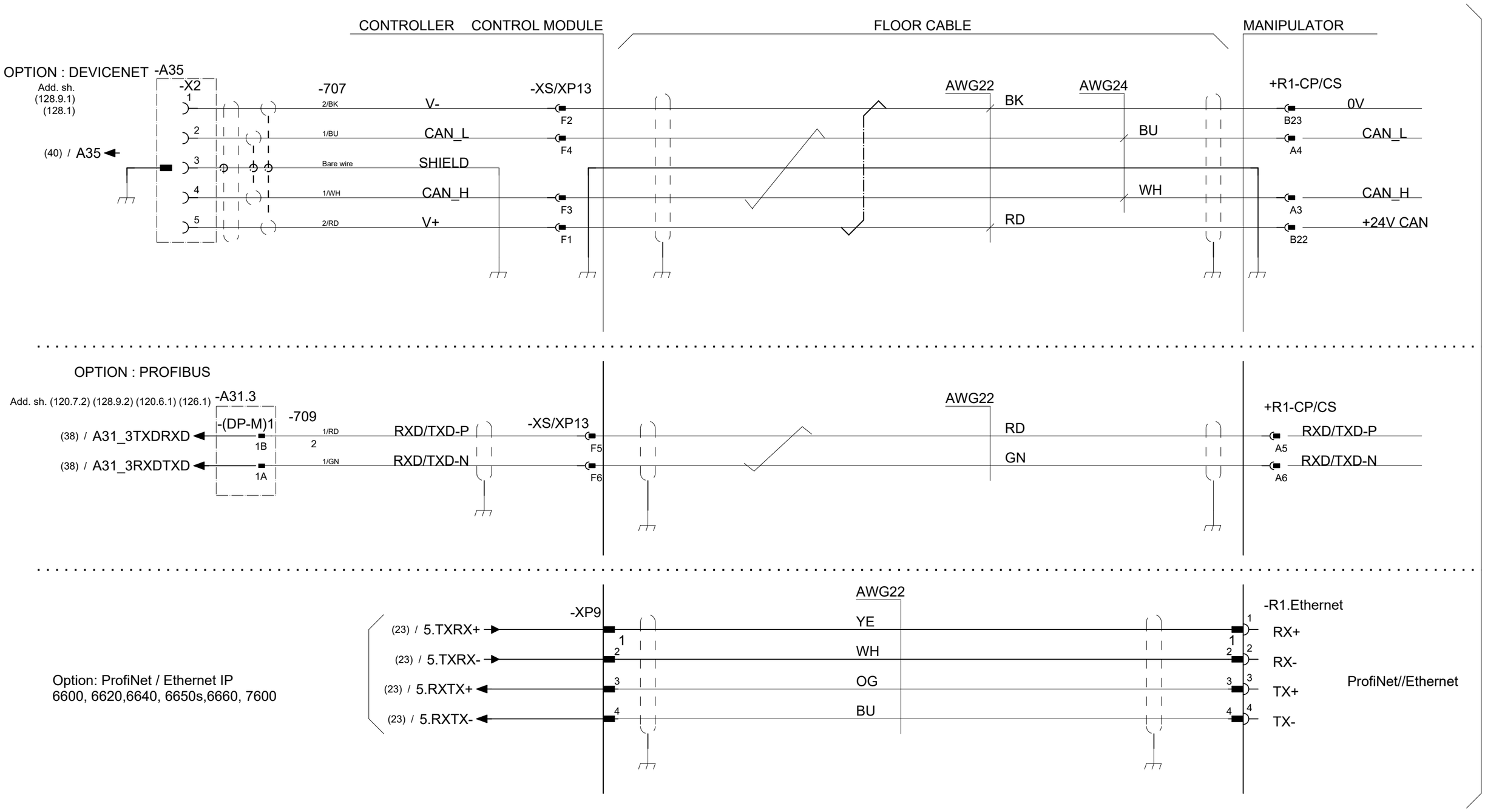

According to Manipulator diagram 3HAC025744-001 and 3HAC13347-1

Latest revision:	ABB	Lab/Office: RA/RDP	IRC5 DESIGN Rel: 24:B DevNet//EtherNet//ProfiNet//PBUS ADDITION TO CP/CS IRB 66xx - 7600	Status: APPROVED	Plant: = Location: + Sublocation: +
				Document no. 3HAC024480-011	Rev. Ind 18
					Page 125 Next 126 Total 164
Prepared by, date: A Hägglund	Approved by, date: S Hällgren 2024-03-18				

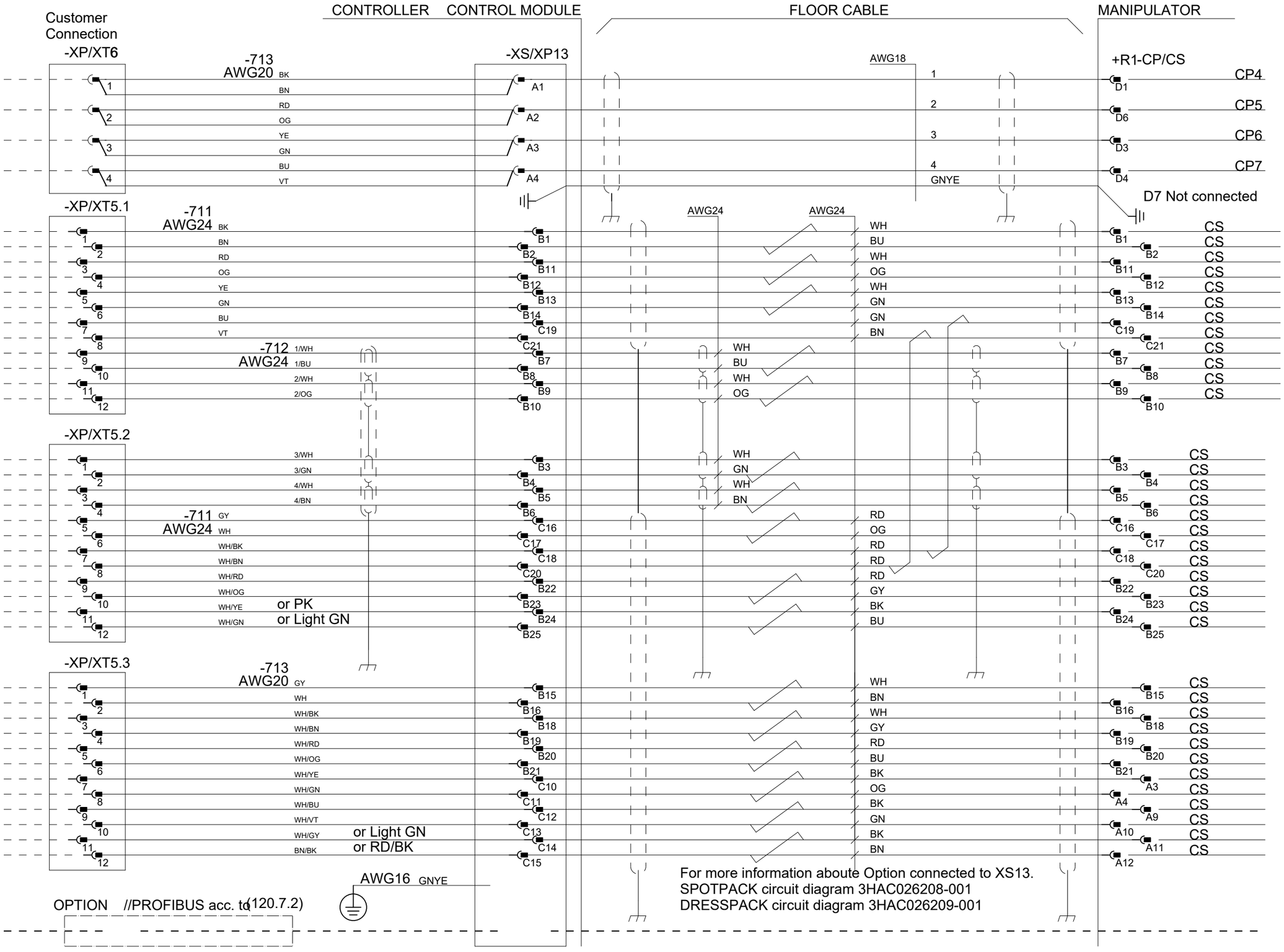

According to Manipulator diagram 3HAC025744-001 and 3HAC13347-1

We reserve all rights in this document and in the information contained therein. Reproduction, use or disclosure to third parties without express authority is strictly forbidden. © Copyright ABB

Latest revision:		Lab/Office: RA/RDP	IRC5 DESIGN Rel: 24:B CUSTOMER POWER/SIGNAL SINGLE CABINET PROFI BUS IRB 6600 - 7600	Status: APPROVED	Plant: = Location: + Sublocation: +
Prepared by, date: A Hägglund	Approved by, date: S Hällgren 2024-03-18			Document no. 3HAC024480-011	Rev. Ind 18

We reserve all rights in this document and in the information contained therein. Reproduction, use or disclosure to third parties without express authority is strictly forbidden. © Copyright ABB

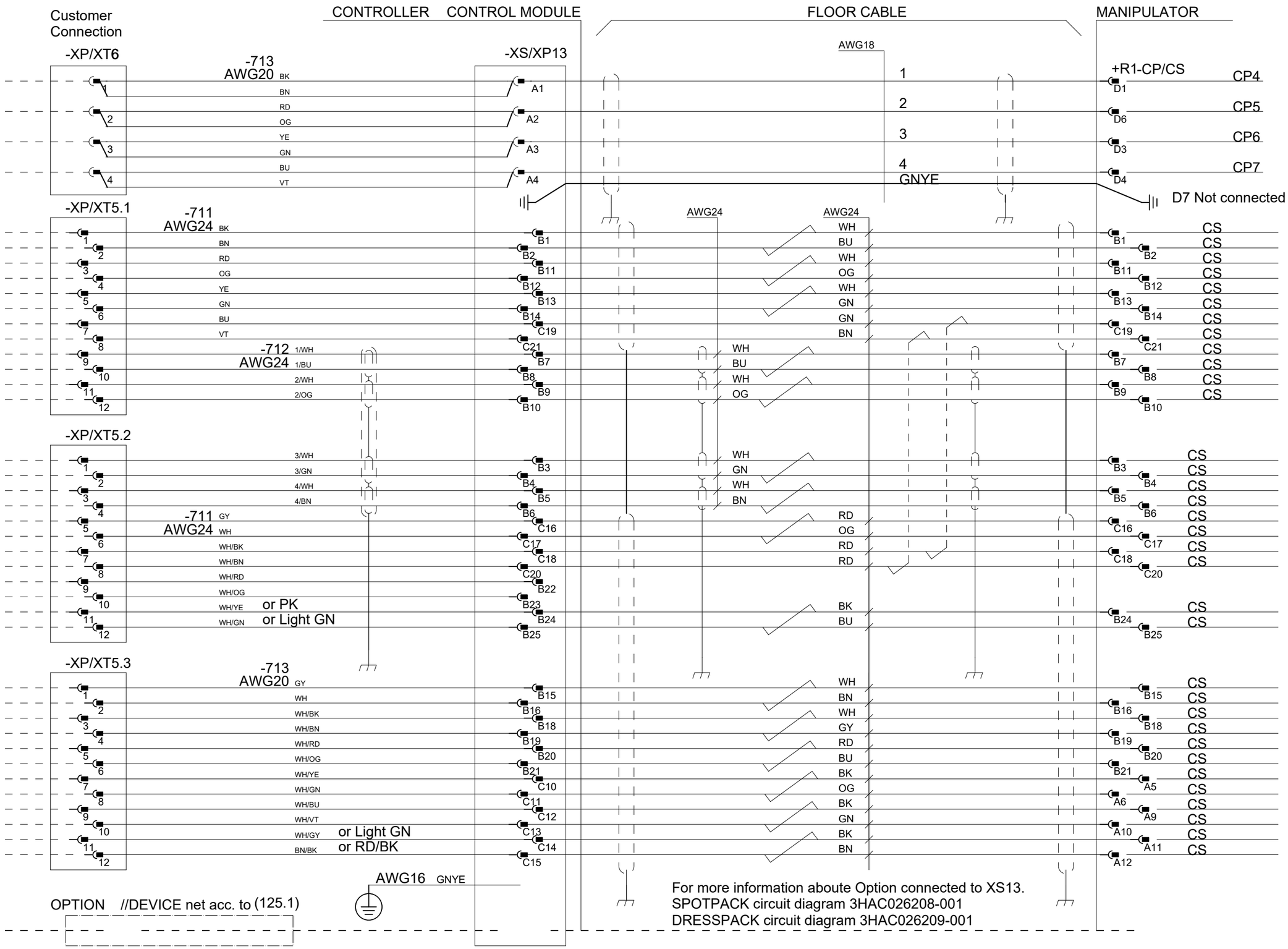

According to Manipulator diagram 3HAC025744-001 and 3HAC13347-1

Latest revision:		ABB	Lab/Office: RA/RDP	IRC5 DESIGN Rel: 24:B CUSTOMER POWER/SIGNAL SINGLE CABINET DEVICE NET IRB 6600 - 7600	Status: APPROVED	Plant: = Location: + Sublocation: +
Prepared by, date: A Hägglund	Approved by, date: S Hällgren 2024-03-18				Document no. 3HAC024480-011	Rev. Ind 18

Page 128
Next 128.5
Total 164

We reserve all rights in this document and in the information contained therein. Reproduction, use or disclosure to third parties without express authority is strictly forbidden. © Copyright ABB

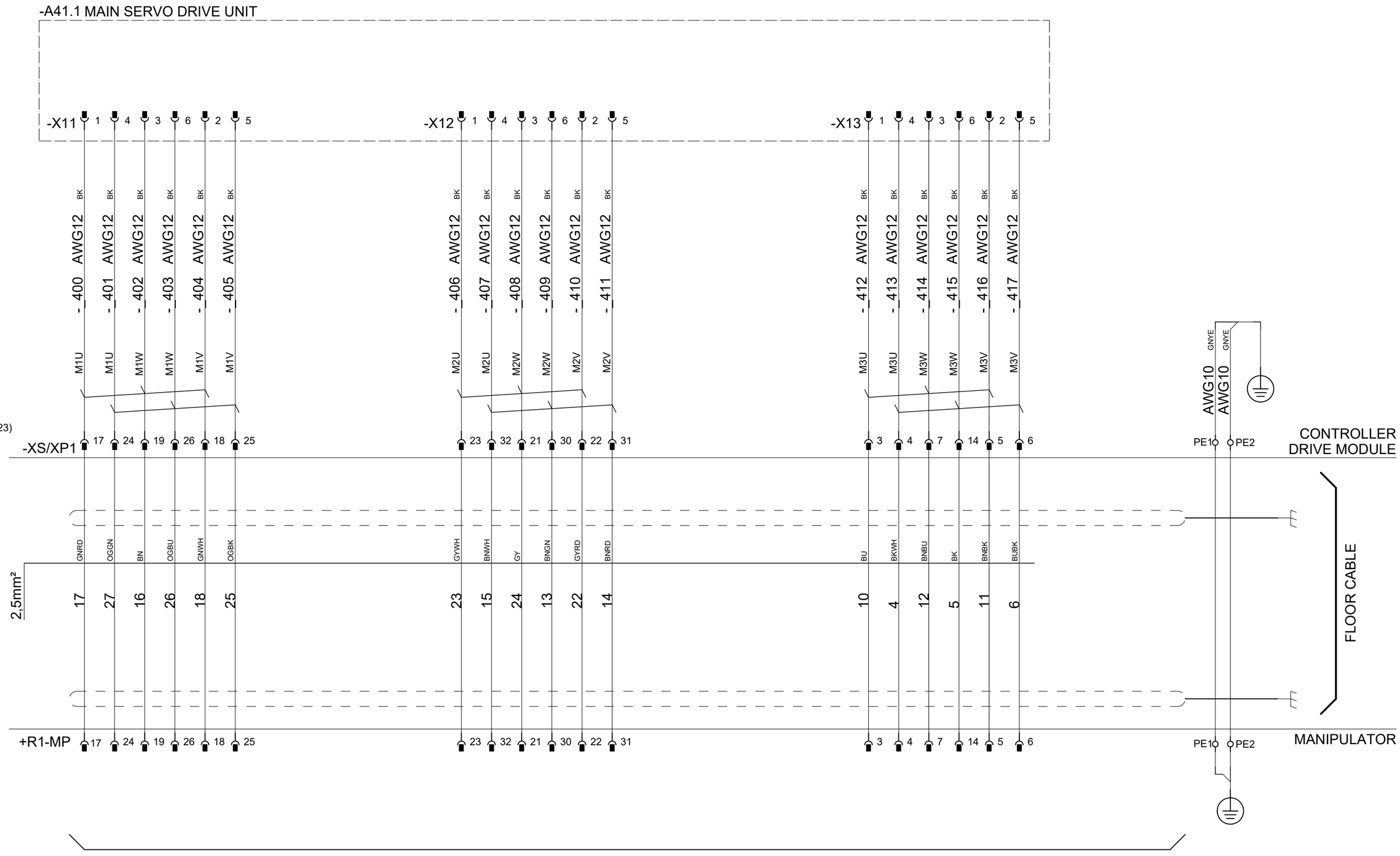

According to Manipulator IRB 87XX circuit diagram 3HAC051028-002

Latest revision:		Lab/Office: RA/RDP	IRC5 DESIGN Rel: 24:B SERVO DRIVE SYSTEM AXES 1-3 IRB 87xx	Status: APPROVED	Plant: = Location: + Sublocation: +
Prepared by, date: A Hägglund	Approved by, date: S Hällgren 2024-03-18			Document no. 3HAC024480-011	Rev. Ind 18

Harness XP11-A41.1 3HAC050605
Harness XP1 and XP11- R1.MP_A and_B 3HAC026787

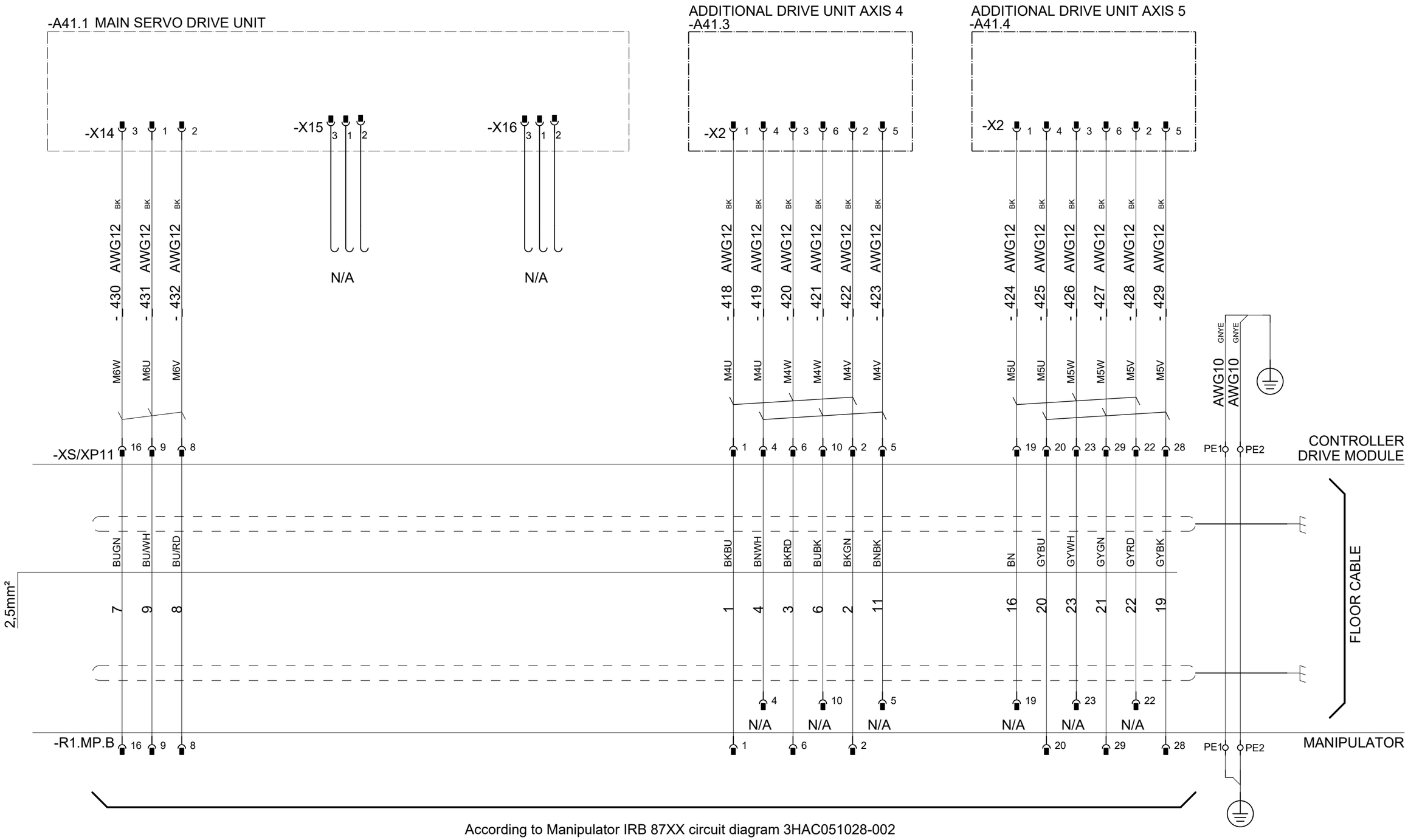

According to Manipulator IRB 87XX circuit diagram 3HAC051028-002

Latest revision:		Lab/Office: RA/RDP	IRC5 DESIGN Rel: 24:B SERVO DRIVE SYSTEM AXES 4-6 IRB 87xx	Status: APPROVED	Plant: = Location: + Sublocation: +
Prepared by, date: A Hägglund	Approved by, date: S Hällgren 2024-03-18			Document no. 3HAC024480-011	Rev. Ind 18
					Page 128.6 Next 128.7 Total 164

We reserve all rights in this document and in the information contained therein. Reproduction, use or disclosure to third parties without express authority is strictly forbidden. © Copyright ABB

We reserve all rights in this document and in the information contained therein. Reproduction, use or disclosure to third parties without express authority is strictly forbidden. © Copyright ABB

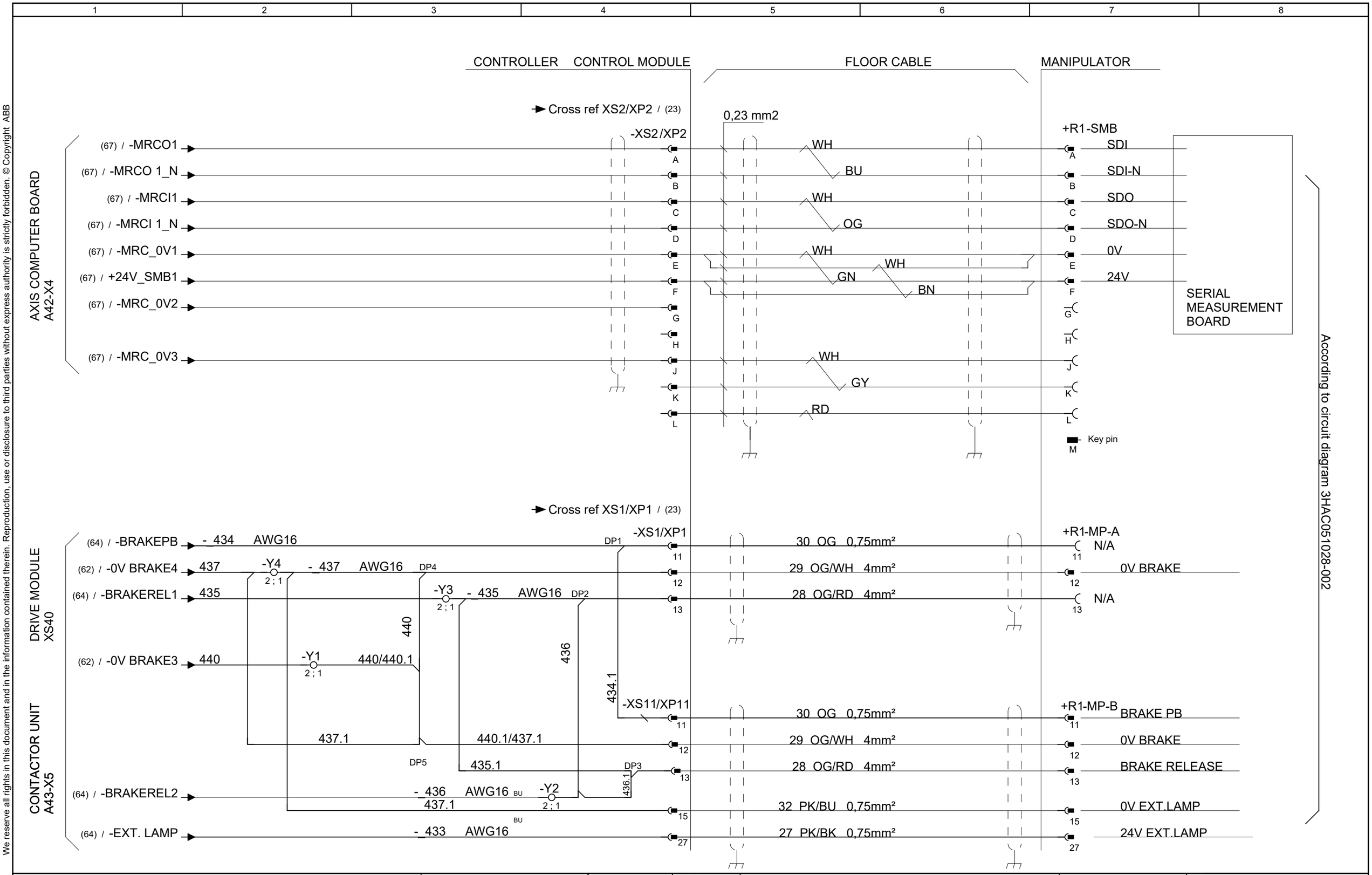

Latest revision:		Lab/Office: RA/RDP	IRC5 DESIGN Rel: 24:B CONTROL CABLE IRB 87xx	Status: APPROVED	Plant: = Location: + Sublocation: +
Prepared by, date: A Hägglund	Approved by, date: S Hällgren 2024-03-18			Document no. 3HAC024480-011	Rev. Ind 18
					Page 128.7 Next 128.8 Total 164

We reserve all rights in this document and in the information contained therein. Reproduction, use or disclosure to third parties without express authority is strictly forbidden. © Copyright ABB

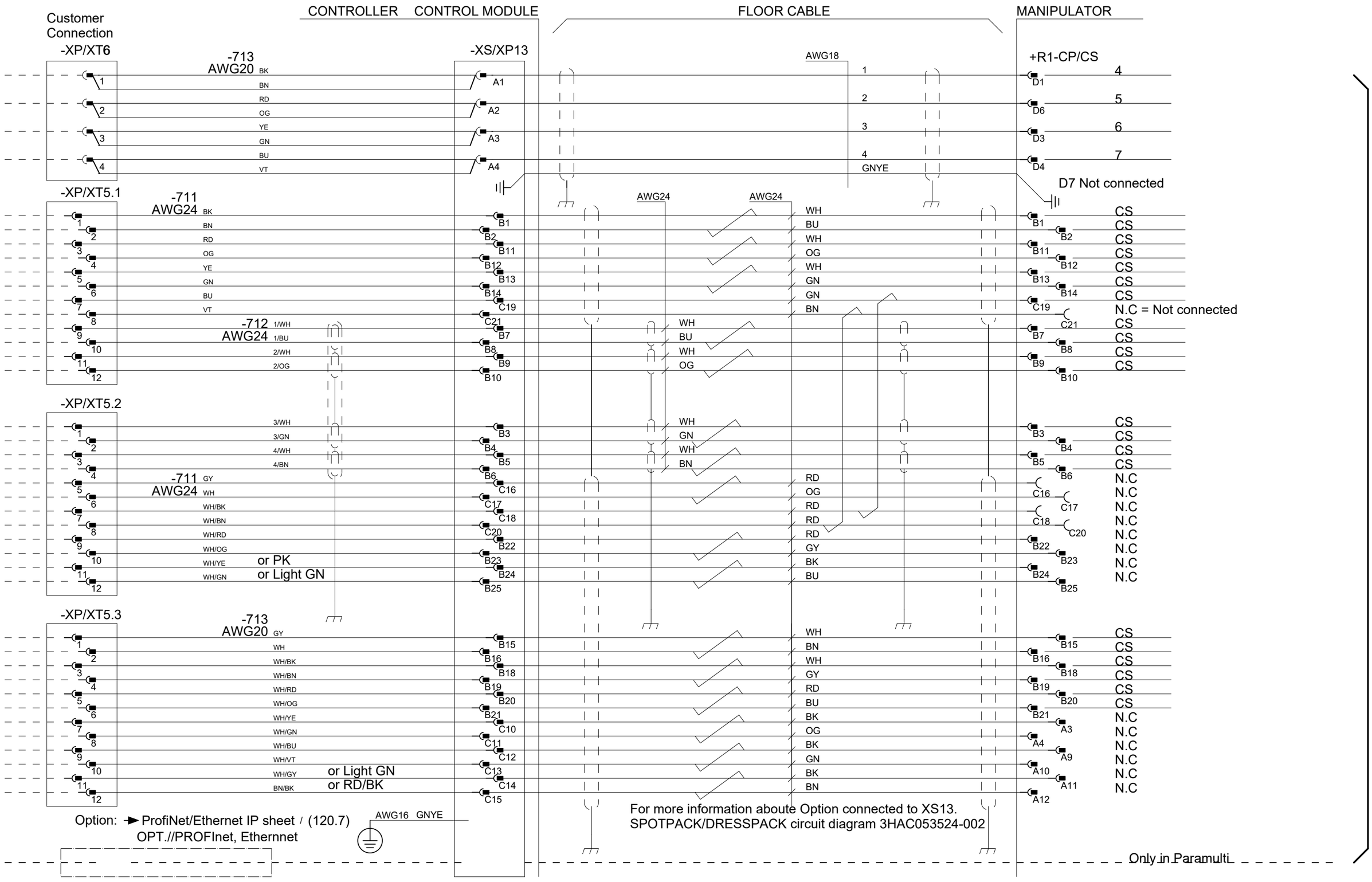

Latest revision:		Lab/Office: RA/RDP	IRC5 DESIGN Rel: 24:B CUSTOMER POWER/SIGNAL PARAMULTI SINGLE CABINET PROFI/DEVICE NET BUS IRB 8700	Status: APPROVED	Plant: = Location: + Sublocation: +
Prepared by, date: A Hägglund	Approved by, date: S Hällgren 2024-03-18			Document no. 3HAC024480-011	Rev. Ind 18
					Page 128.8 Next 128.9 Total 164

We reserve all rights in this document and in the information contained therein. Reproduction, use or disclosure to third parties without express authority is strictly forbidden. © Copyright ABB

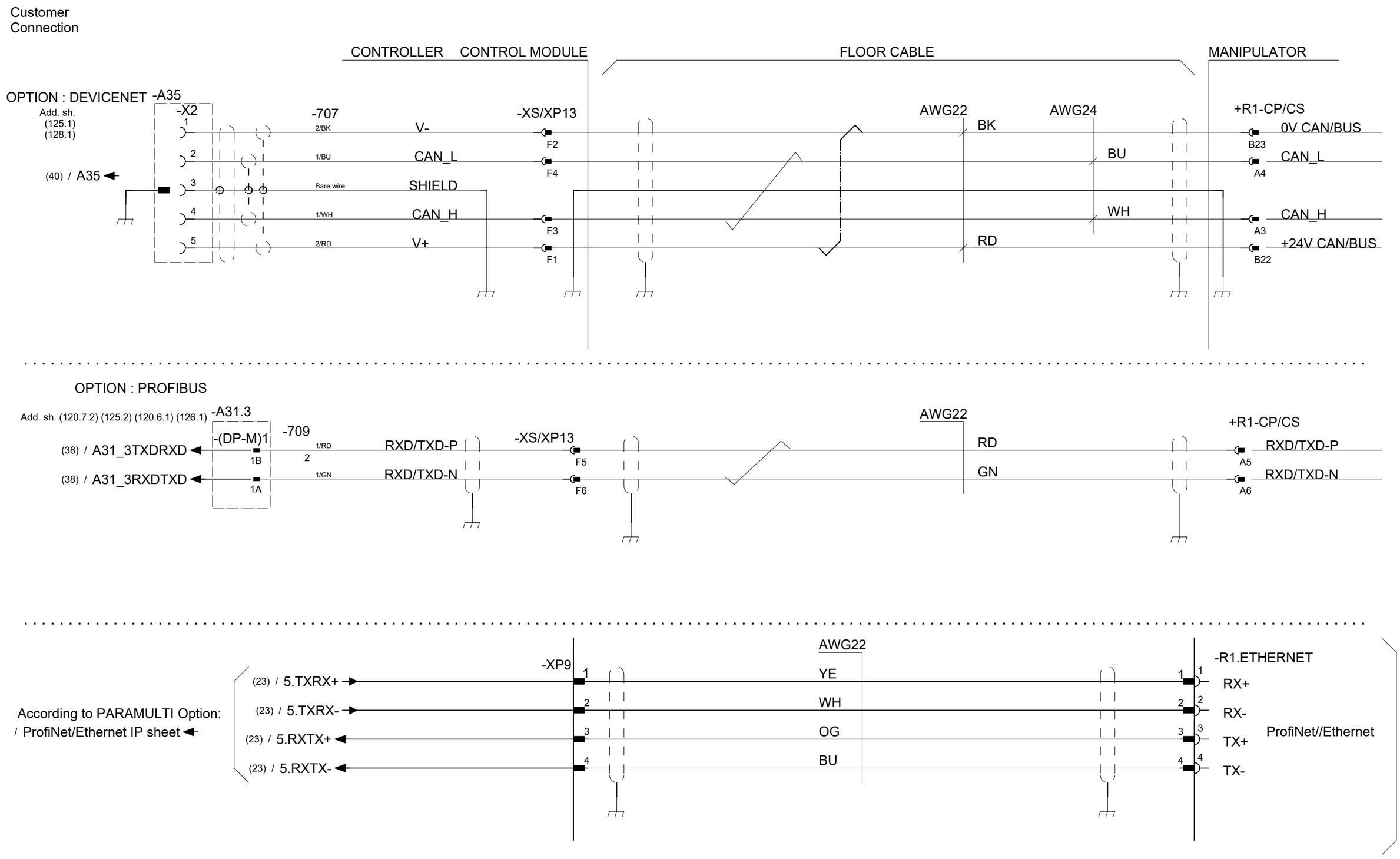

Latest revision:		Lab/Office: RA/RDP	IRC5 DESIGN Rel: 24:B EtherNet//ProfiNet//PBUS ADDITION TO CP/CS PARAMULTI IRB 8700	Status: APPROVED	Plant: = Location: + Sublocation: +
Prepared by, date: A Hägglund	Approved by, date: S Hällgren 2024-03-18			Document no. 3HAC024480-011	Rev. Ind 18
					Page 128.9 Next Total 164